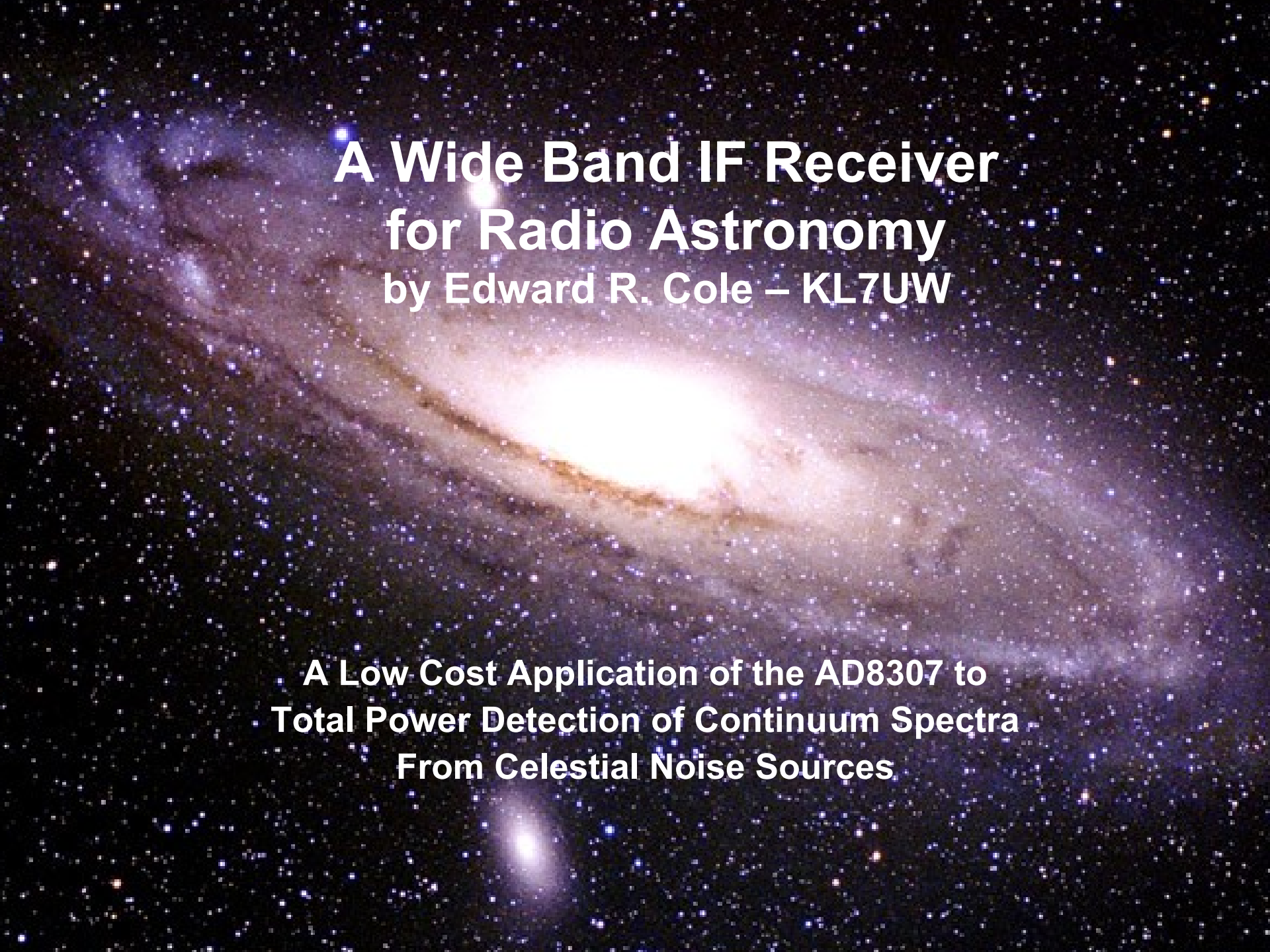

A Wide Band IF Receiver for Radio Astronomy

by Edward R. Cole – KL7UW

A Low Cost Application of the AD8307 to Total Power Detection of Continuum Spectra From Celestial Noise Sources

Background

- This Project grew out of a desire to use my EME dish for radio astronomy and SETI observations.
- My 1296-MHz EME system provides the dish, feed, and low noise amplifier usable at 1420-MHz.
- This is interfaced with a 1420 to 144 MHz converter feeding a 144-MHz SSB radio for narrowband SETI observations in the Argus Program of the SETI-League.
- What I needed was a simple VHF receiver that would detect wide band noise power that could be digitized for computer recording and analysis.

Predecessors

- Not a new approach
- Amateur and student programs have built radio telescopes.
- Commonly these used diode detectors.
- Univ. of Indianapolis (Malcolm Mallette) set up a 16-foot dish with a modified C-band satellite-TV receiver using a home-built 1N34 wideband detector. RC circuits provided for integration and A/D conversion to digital for input to a computer.
- Others have experimented with Shotkey diodes.
- Problems:

  - Diodes are non-linear. (square-law devices)

  - Dynamic range of RF power must be limited to obtain linear output.

  - Diode require considerable amplification (-20 to 0 dBm).

The AD8307

- 2001 QST Article by Wes Hayward (W7ZOI) and Bob Larkin (W7PUA) introduced the AD8307 logarithmic amplifier as a power meter.
- The AD8307 is an 8-pin DIP usable to 500-MHz at $10 each.
- Output is a dc level proportional to input power (25 mv per dB).
- Effective range is from -70 dBm with 0.5 vdc out up to +10 dBm with 2.5 volts…a dynamic range of 80 dB with remarkable linearity.
- In 2005 Paul Wade used the AD8307 to design a portable power meter building on Hayward and Larkin and adding a Linear Technology IC to cover a range from 10 KHz to 10 GHz.
- I bought one of Paul's power meters for my microwave bench.
- It also became my test platform to develop the AD8307 as a wideband detector for a total power radio telescope.

WBIF Design

- My project started as a diode-based detector but it sat unfinished for years so that I took advantage of a better design.
- I incorporated some features from the U of I design and married that with a 12-bit A/D that utilizes software developed by Jim Sky.
- My 2.4 meter dish provides 28.4 dB gain at 1420 MHz, followed by a RAS LNA with over 30 dB gain at 21K noise temp. Coupled with my DEMI 1420 converter's gain of 30 dB, I only need to add about 40 dB of IF gain at 144 MHz to achieve system gain of 120 dB.
- Two MAR-6 mmic amps from DEMI provided the needed IF gain.
- A two-pole LC filter provided a 20 MHz band pass.
- The next figures are of the block diagram of my radio telescope, and the schematic diagrams for the WBIF and the IF amplifiers.

Radio Telescope Diagram

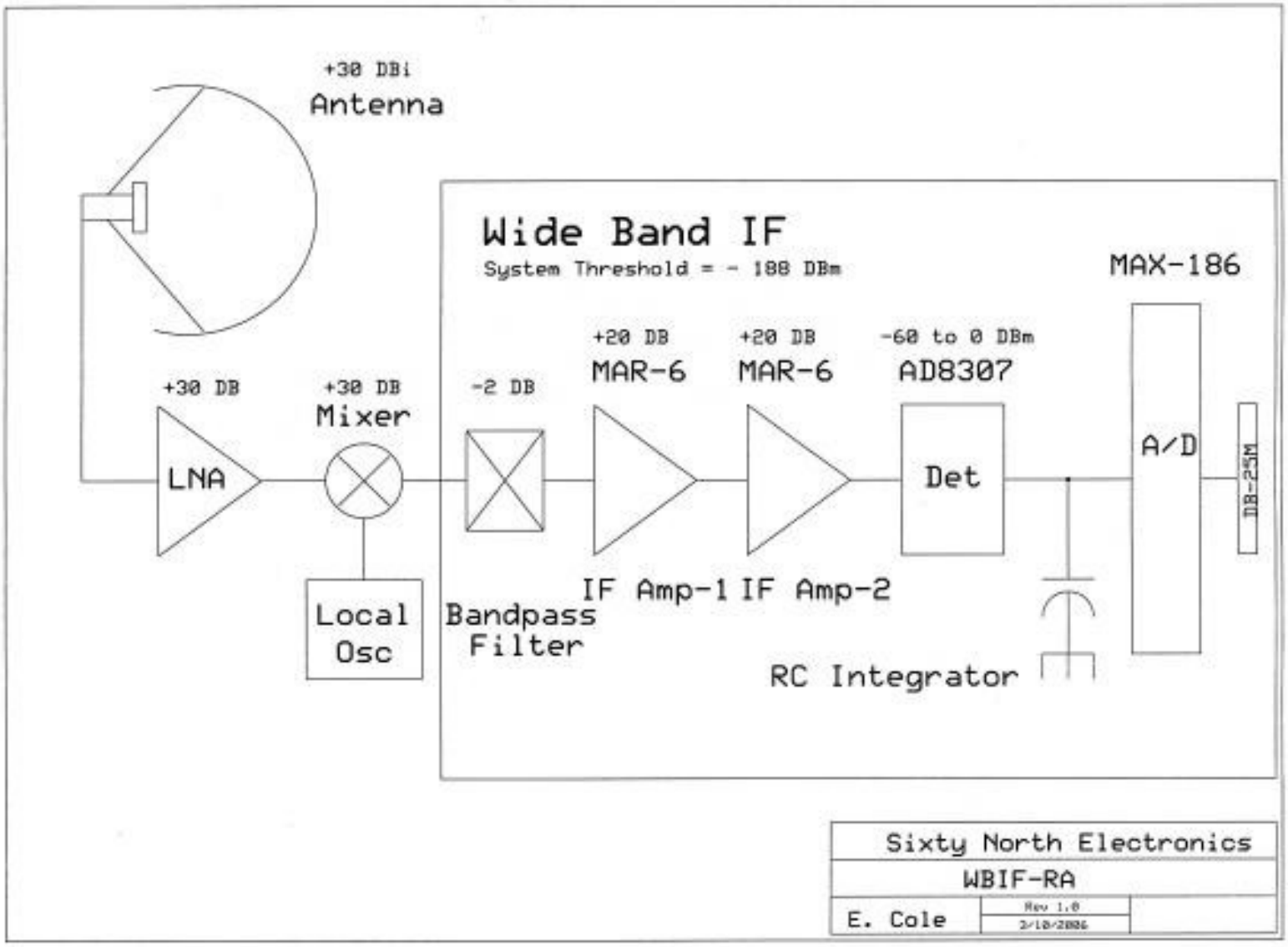

WBIF Schematic Diagram

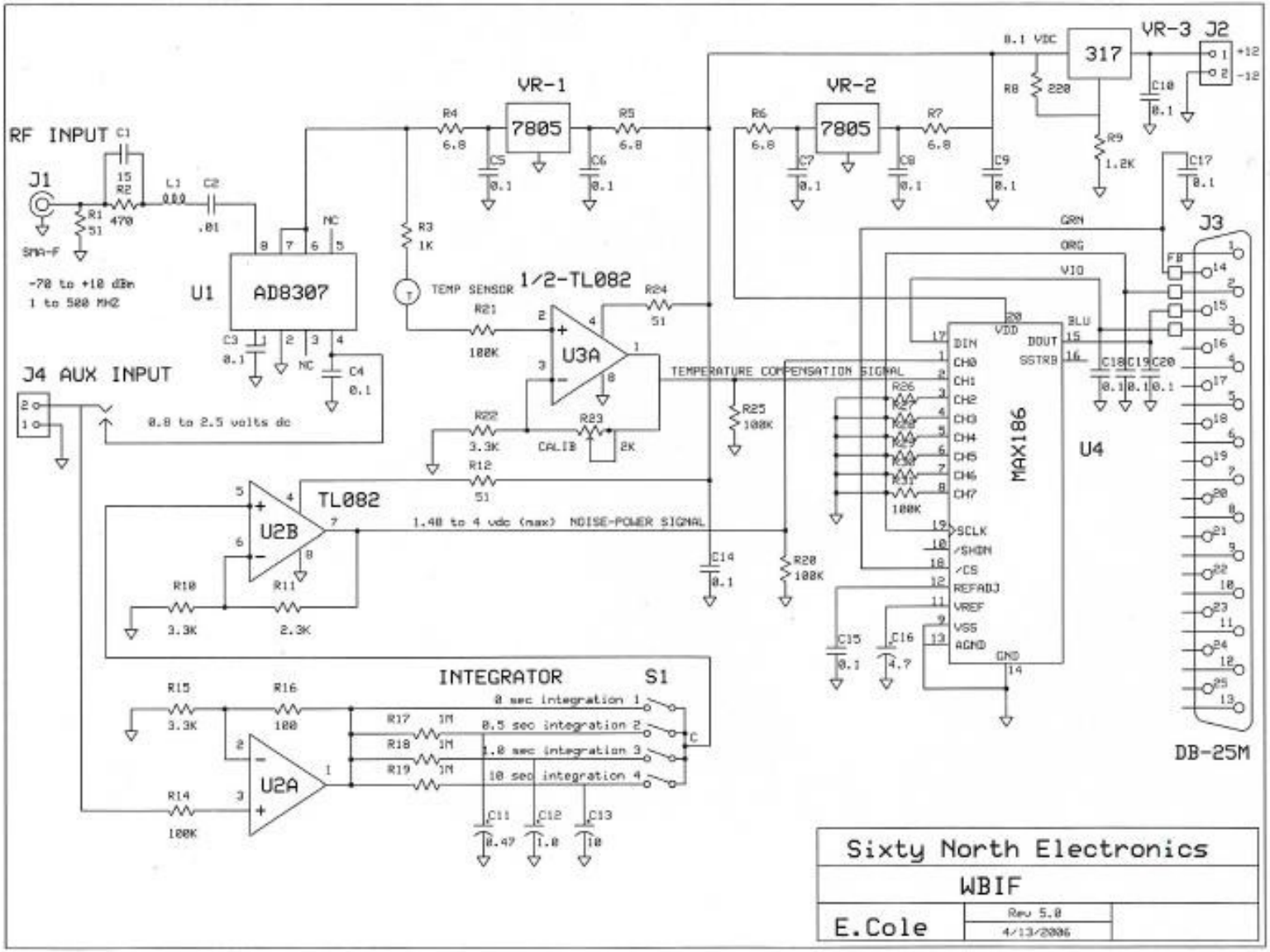

Downeast Microwave MMIC Amplifier

Universal Wide Band Amplifier For <1 GHz

DEM Part Number MMICK and MMICPCB

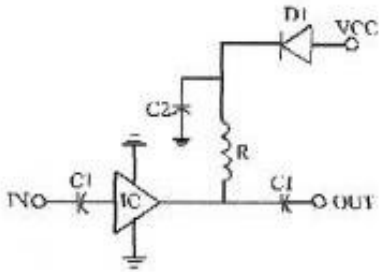

C1	100F
C2	0.1F
D1	1N4000
MMIC PCB	Glass PC Board

MMIC	R
MAR1	470 1/4W
MAR3	270 1/4W
MAR6	330 1/4W
MAV11	180 1/2W
INA03184	180 1/2W

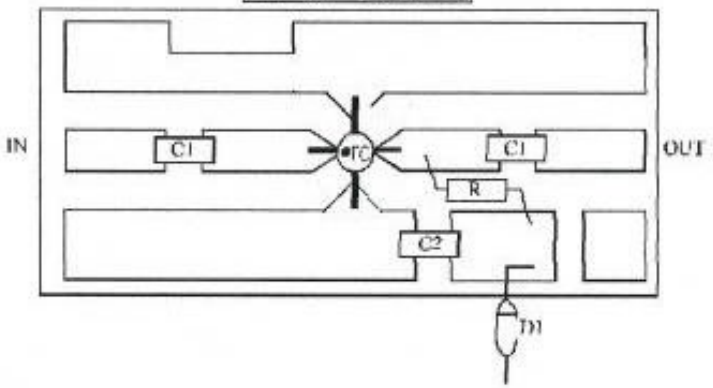

WBIF Prototype and DEMI IF Amplifier

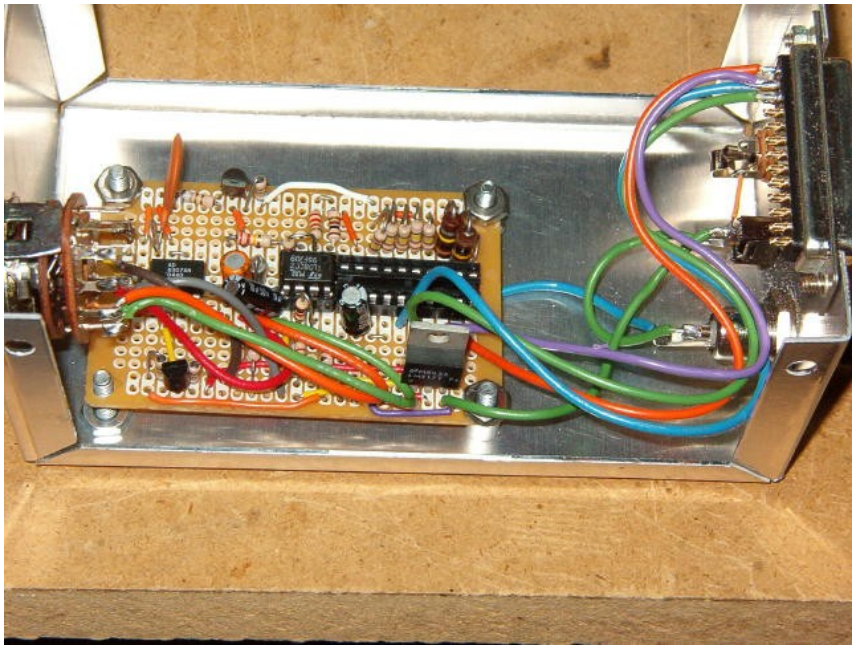

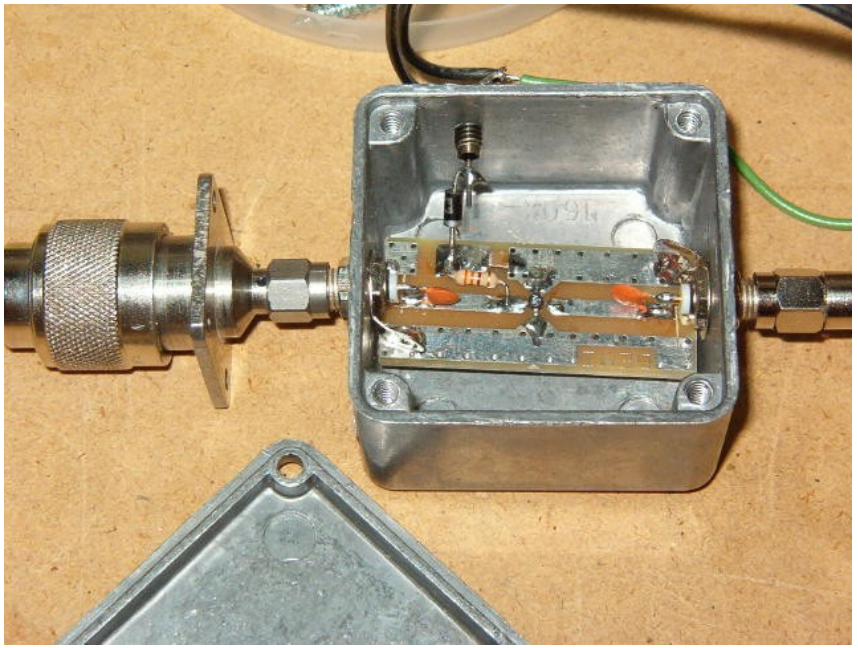

Wide band IF Receiver

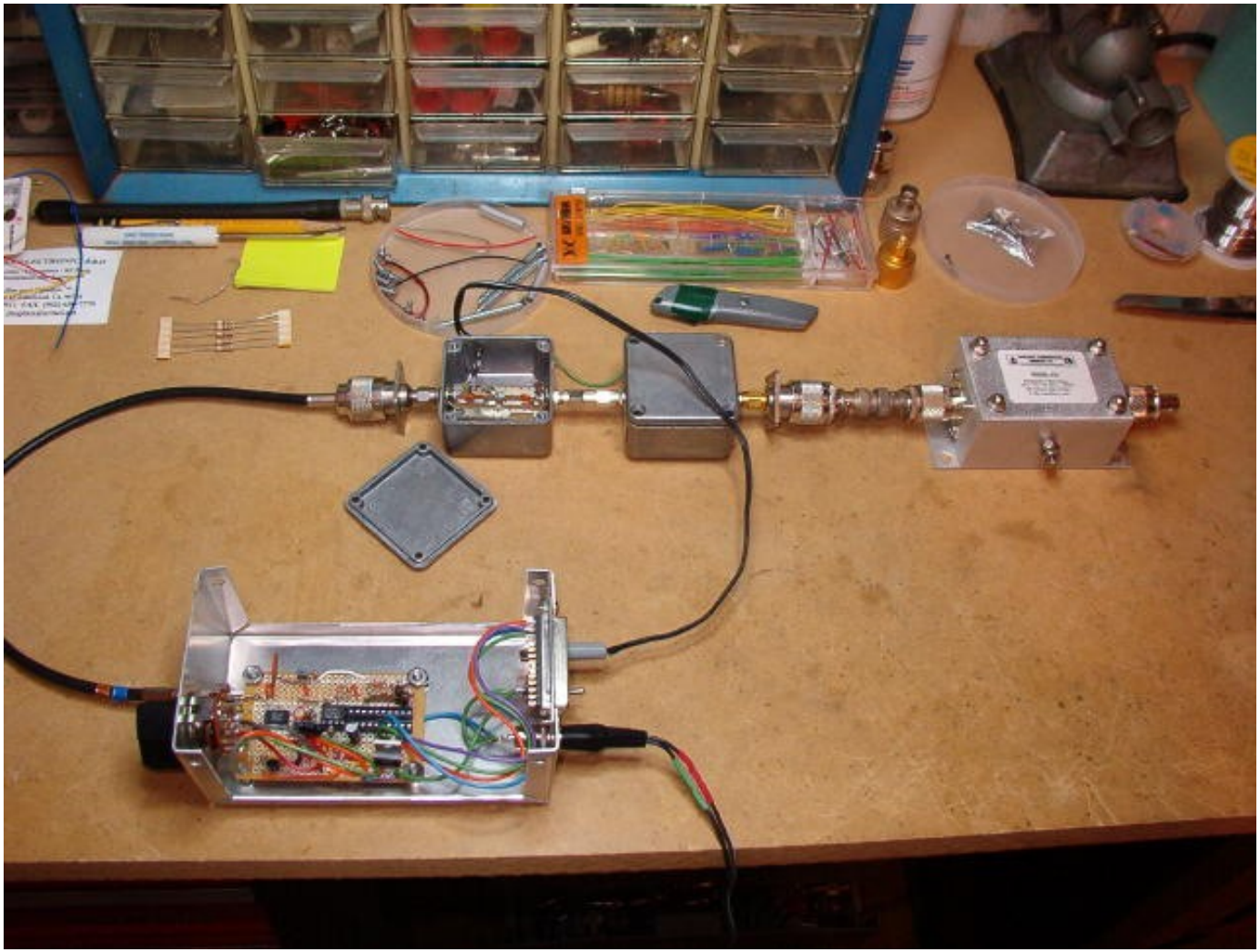

Measurements

- TPC-5
- TPC-3
- TPC-4
- Manufacturers Data Curves for the AD8307

Measurements

Output Volts	Input DBm	X-Axis
1.4822	-70	1
1.4877	-65	2
1.5031	-60	3
1.5384	-55	4
1.5969	-50	5
1.6927	-45	6
1.8031	-40	7
1.9470	-35	8
2.1607	-30	9
2.5619	-25	10
3.0419	-20	11
3.4734	-15	12
3.8156	-10	13
4.1927	-5	14
4.5510	0	15
4.8966	5	16
5.3880	10	17

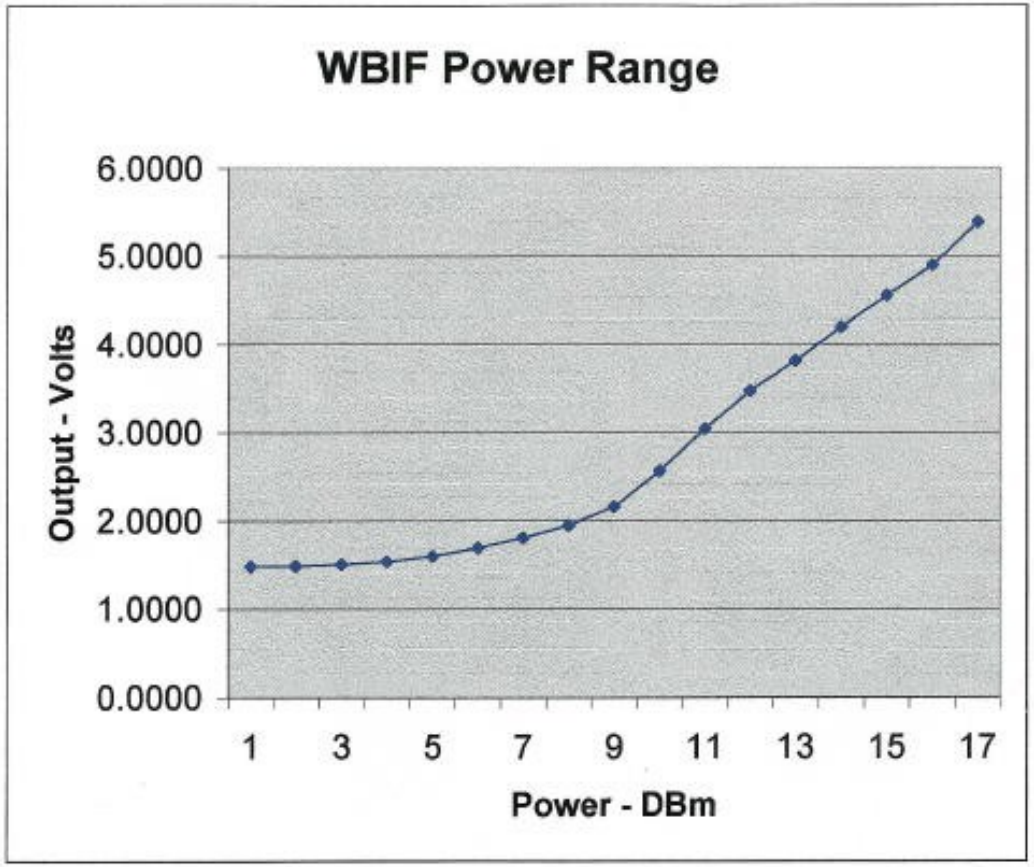

- WBIF Calibration Using 144 MHz Signal Generator.
- Signal detection at -50 dBm; Linear from -35 to +10 dBm.

Measurements

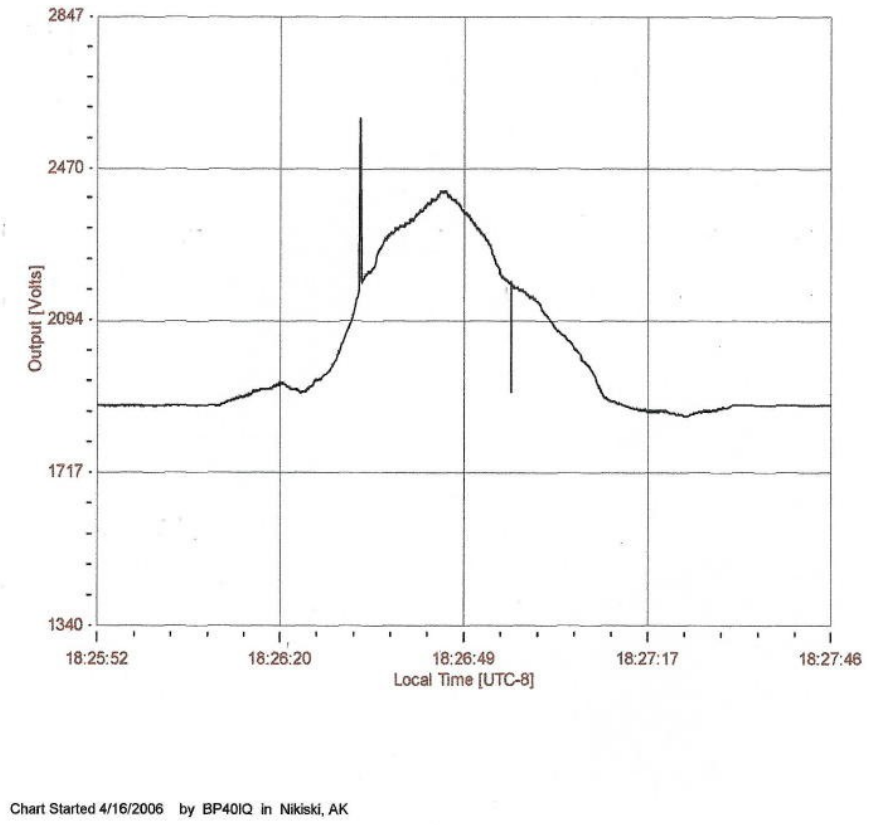

- Attempts to make Sun Noise Measurements were mixed with approximately 1 dB of signal seen on 2422 MHz using my 33-inch satellite dish.
- I could not make reliable observations at 1420 MHz due to an unstable LNA and/or Convertors.
- Therefore, I made this similated drift curve by varying the IF signal into the WBIF coupled to SkyPipe running on my computer.

Conclusions

- The use of the AD8307 as a VHF wide band IF detector appears to work well.
- I have not been able to determine temperature gain stability.
- I was intending to have professional pc boards made by ExpressPCB, but I have more design ideas to try out first.
- Recently, the AD623 Instrumentation Operation Amplifier was subject of a QST article and I obtained two samples to substitute for the TL-082 used in my prototype. The AD623 should provide better performance and range of voltage for the MAX-186 A/D.
- I wish to explore further the offset functions of SkyPipe.
- I will post my ongoing experiments with the WBIF on my website: http://www.qsl.net/al7eb/rawbif.htm