A 50 MHz CONTEST ARRAY

The 2007 VERSION

Dave Olean K1WHS

Lebanon, Maine 04027

Fun at FN43MJ48



Aerial view of the hangout for the “Hill People”

(Not to be confused with the Village People)



The Old 50 MHz Array in 2004

What is the best way to take down a bolt together tower?

How would Mc Gyver do it?



















50 MHz DESIGN GOALS

- Wide E plane beamwidth
- Adjustable patterns, choice of arrival angles
- Multiple directions at the same time
- Option for high gain operation
- Full rotation of all four yagis possible
- Raise height of lowest yagi. Old array had problems with the bottom set of yagis A little tree removal was needed as well. (I'll never get a Nobel Peace Prize)

The 7 Element Yagi

- 11 dBd forward gain
- 25+ dB F/B ratio
- Very clean H plane pattern IMPORTANT!!
- Reasonably short boom length, 30 ft 8 in.

  Must fit under the guy wires!
- Rugged design needed… Metal braces.. I don't want to pick up pieces after the next ice storm. All the braces are pinned with bolts.



Single K1WHS-7 E-Plane in Free Space

* Total Field

EZNEC+

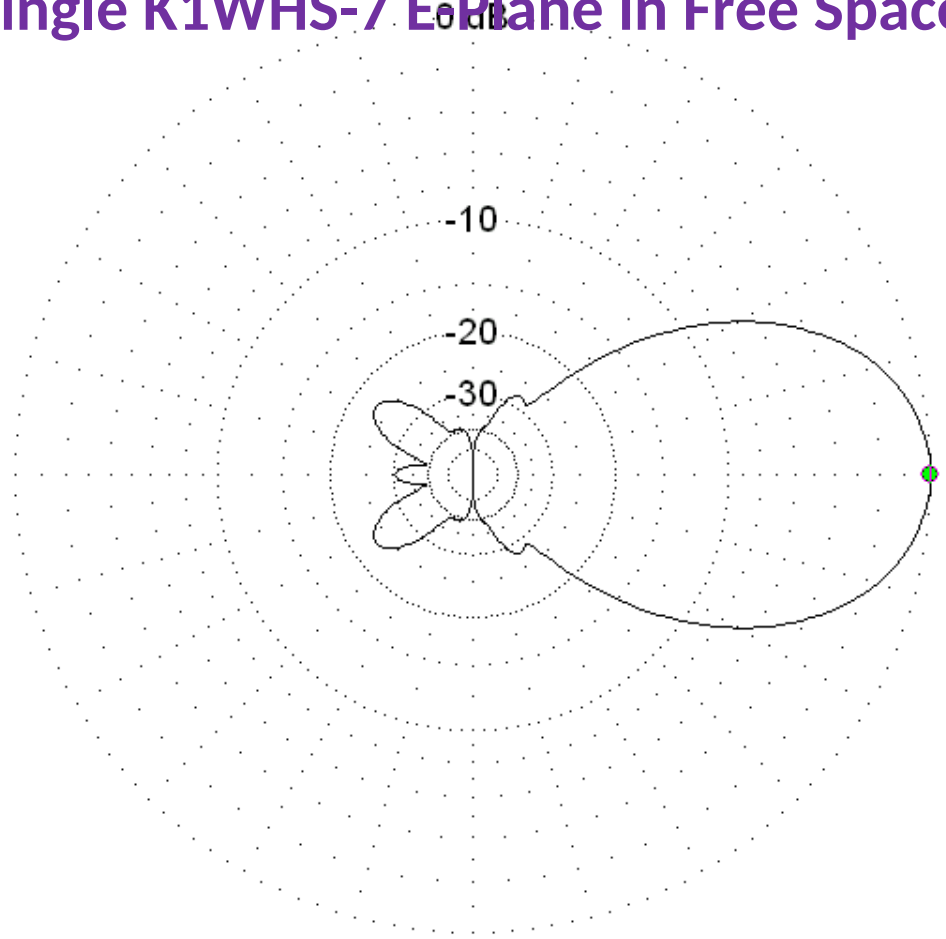

50.2 MHz

Azimuth Plot
Elevation Angle 0.0 deg.
Outer Ring 13.18 dBi

Slice Max Gain 13.18 dBi @ Az Angle = 0.0 deg.
Front/Back 30.37 dB
Beamwidth 41.2 deg.; -3dB @ 339.4, 20.6 deg.
Sidelobe Gain -10.06 dBi @ Az Angle = 145.0 deg.
Front/Sidelobe 23.24 dB

Cursor Az 0.0 deg.
Gain 13.18 dBi
0.0 dBmax

Total Field

EZNEC+

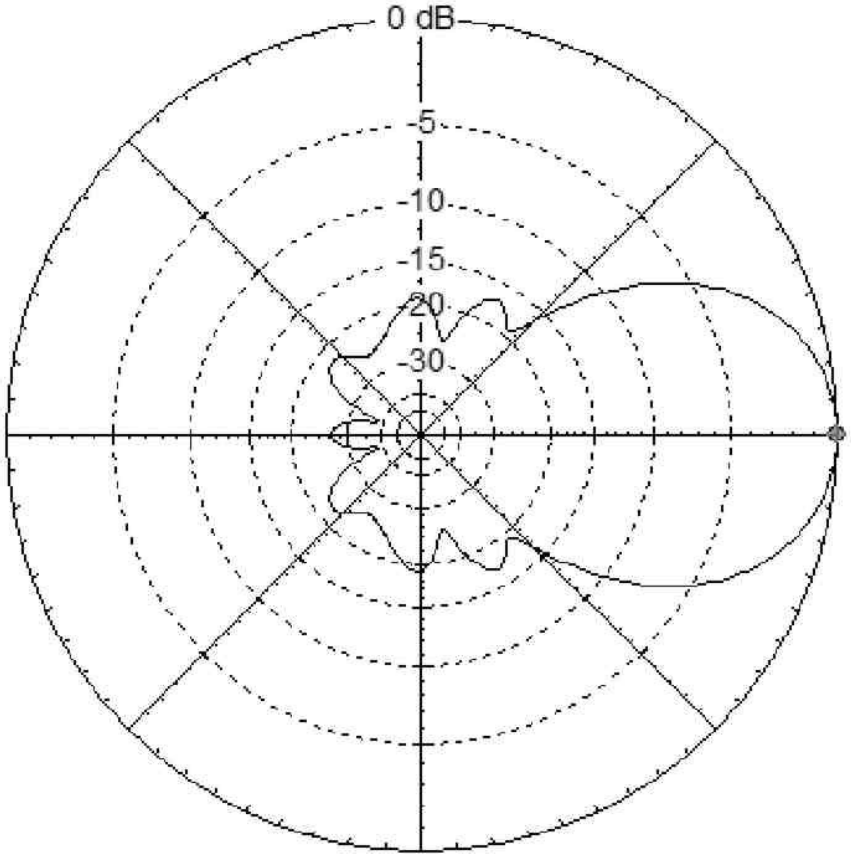

50.2 MHz

Elevation Plot	
Azimuth Angle	0.0 deg.
Outer Ring	13.09 dBi

Cursor Elev	0.0 deg.
Gain	13.09 dBi
	0.0 dBmax

Slice Max Gain	13.09 dBi @ Elev Angle = 0.0 deg.
Front/Back	26.27 dB
Beamwidth	46.6 deg.; -3dB @ 336.7, 23.3 deg.
Sidelobe Gain	-3.91 dBi @ Elev Angle = 60.0 deg.
Front/Sidelobe	17.01 dB

*** Total Field**

EZNEC+

7 ELEMENT YAGI @ 101 FT.

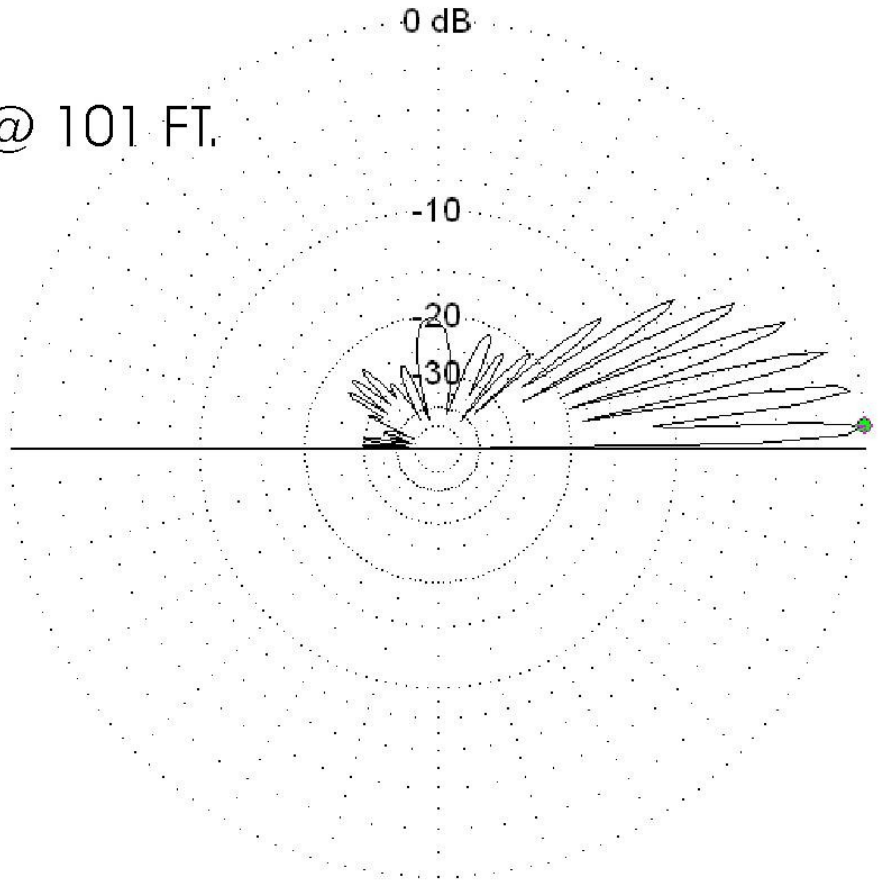

50.2 MHz

Elevation Plot
Azimuth Angle 0.0 deg.
Outer Ring 18.75 dBi

Slice Max Gain 18.75 dBi @ Elev Angle = 3.0 deg.
Beamwidth 2.6 deg.; -3dB @ 1.5, 4.1 deg.
Sidelobe Gain 18.3 dBi @ Elev Angle = 8.0 deg.
Front/Sidelobe 0.45 dB

Cursor Elev 3.0 deg.
Gain 18.75 dBi
0.0 dBmax

* Total Field

EZNEC+

K1WHS Stack - 77’ Yagi only

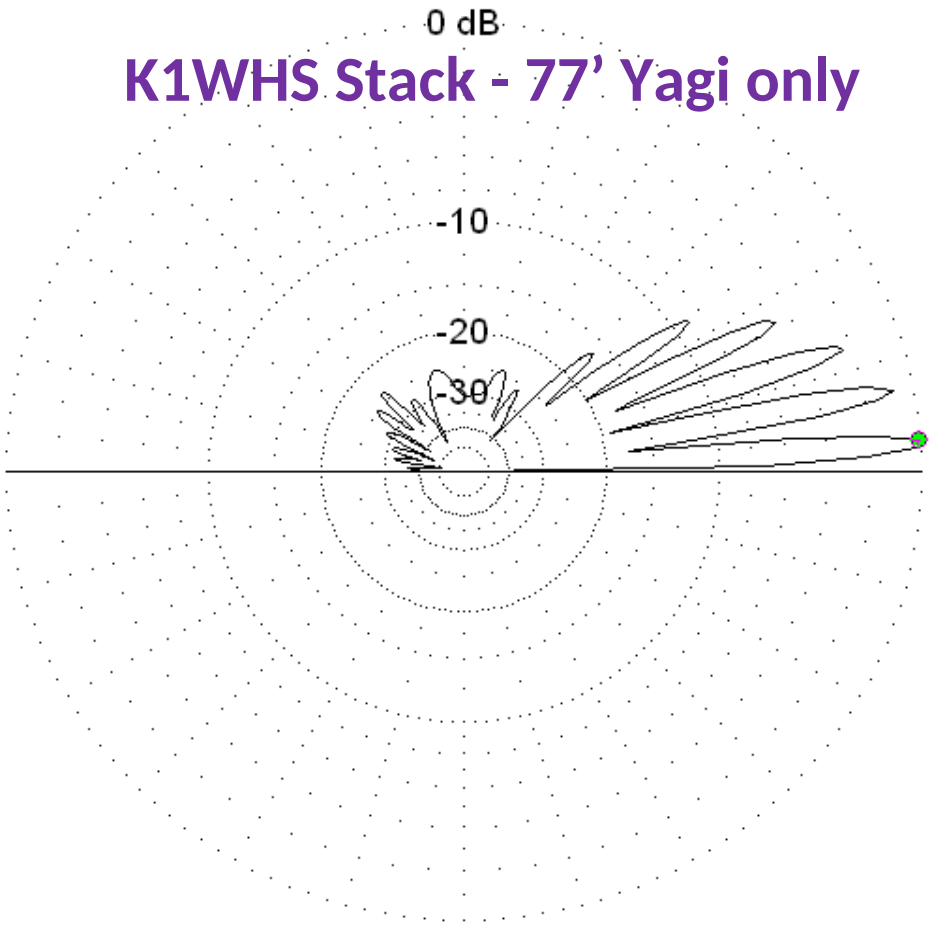

50.2 MHz

Elevation Plot
Azimuth Angle 0.0 deg.
Outer Ring 18.88 dBi

Slice Max Gain 18.88 dBi @ Elev Angle = 4.0 deg.
Beamwidth 3.6 deg.; -3dB @ 1.8, 5.4 deg.
Sidelobe Gain 18.07 dBi @ Elev Angle = 11.0 deg.
Front/Sidelobe 0.81 dB

Cursor Elev 4.0 deg.
Gain 18.88 dBi
0.0 dBmax

EZNEC+

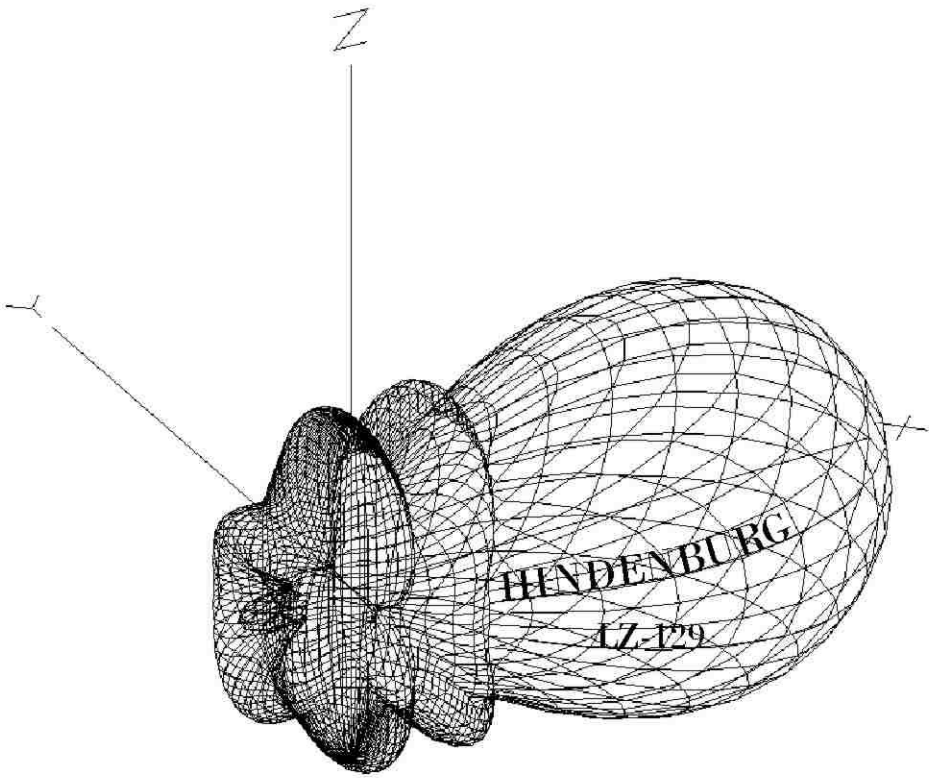

7 ELEMENT 50 MHz YAGI 3D PATTERN
FREE SPACE



* Total Field

EZNEC+

K1WHS Stack – 2 Yagis @ 101’ and 77’

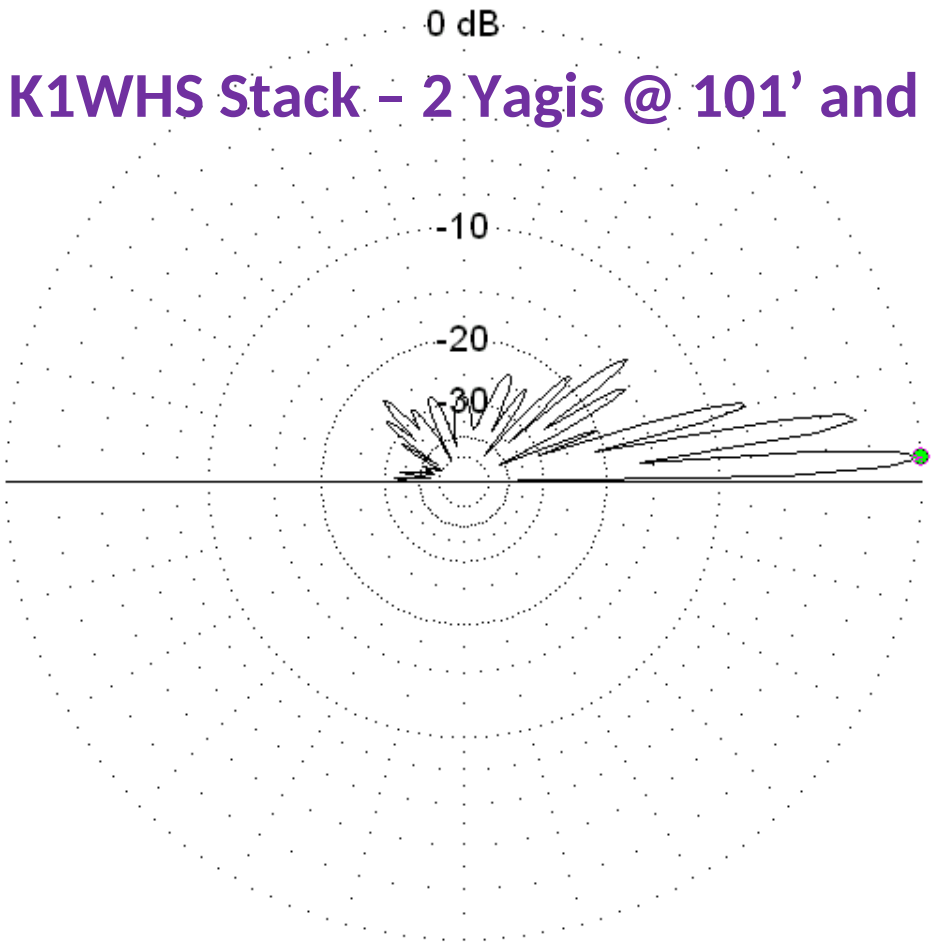

50.2 MHz

Elevation Plot
Azimuth Angle 0.0 deg.
Outer Ring 21.71 dBi

Slice Max Gain 21.71 dBi @ Elev Angle = 3.0 deg.
Beamwidth 2.8 deg.; -3dB @ 1.7, 4.5 deg.
Sidelobe Gain 19.27 dBi @ Elev Angle = 9.0 deg.
Front/Sidelobe 2.43 dB

Cursor Elev 3.0 deg.
Gain 21.71 dBi
0.0 dBmax

* Total Field

EZNEC+

K1WHS Stack - 2 Yagis @ 53’ and 29’

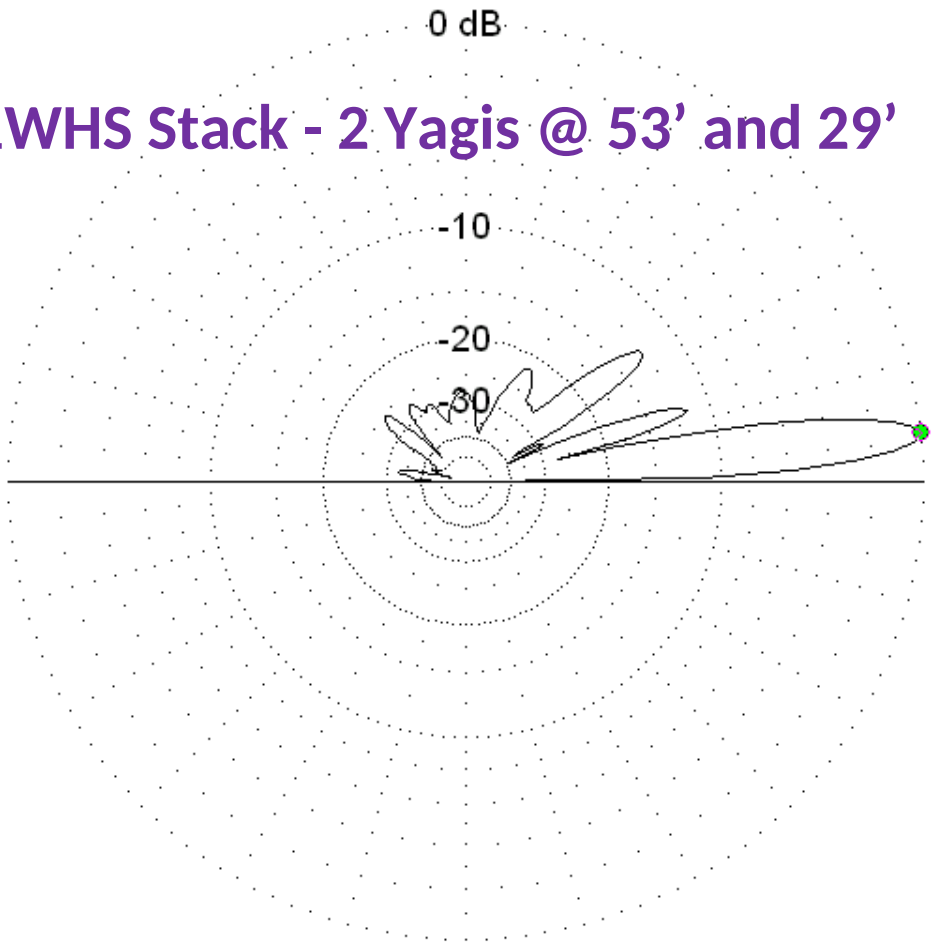

50.2 MHz

Elevation Plot	
Azimuth Angle	0.0 deg.
Outer Ring	20.72 dBi
Slice Max Gain	20.72 dBi @ Elev Angle = 6.0 deg.
Beamwidth	6.4 deg.; -3dB @ 3.0, 9.4 deg.
Sidelobe Gain	9.1 dBi @ Elev Angle = 18.0 deg.
Front/Sidelobe	11.62 dB

Cursor Elev	6.0 deg.
Gain	20.72 dBi
	0.0 dBmax

*** Total Field**

EZNEC+

7 ELEMENT YAGI @ 101 FT.

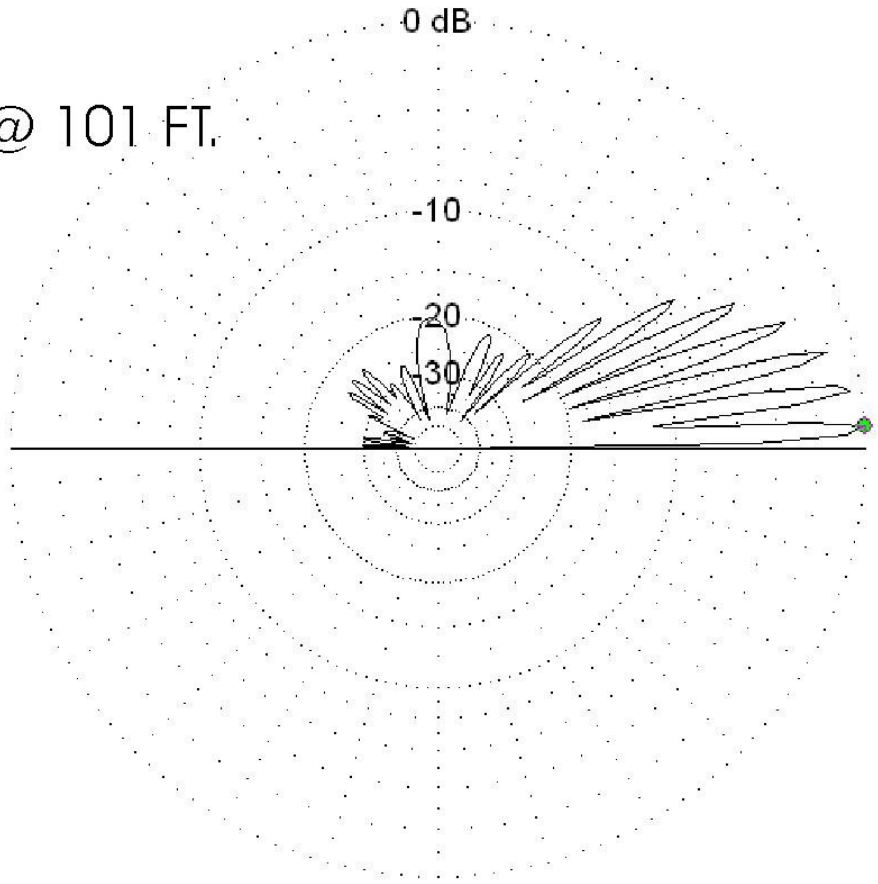

50.2 MHz

Elevation Plot
Azimuth Angle 0.0 deg.
Outer Ring 18.75 dBi

Slice Max Gain 18.75 dBi @ Elev Angle = 3.0 deg.
Beamwidth 2.6 deg.; -3dB @ 1.5, 4.1 deg.
Sidelobe Gain 18.3 dBi @ Elev Angle = 8.0 deg.
Front/Sidelobe 0.45 dB

Cursor Elev 3.0 deg.
Gain 18.75 dBi
0.0 dBmax





* Total Field

EZNEC+

K1WHS Stack – All 4 Yagis @ 101', 77', 53' and 29'

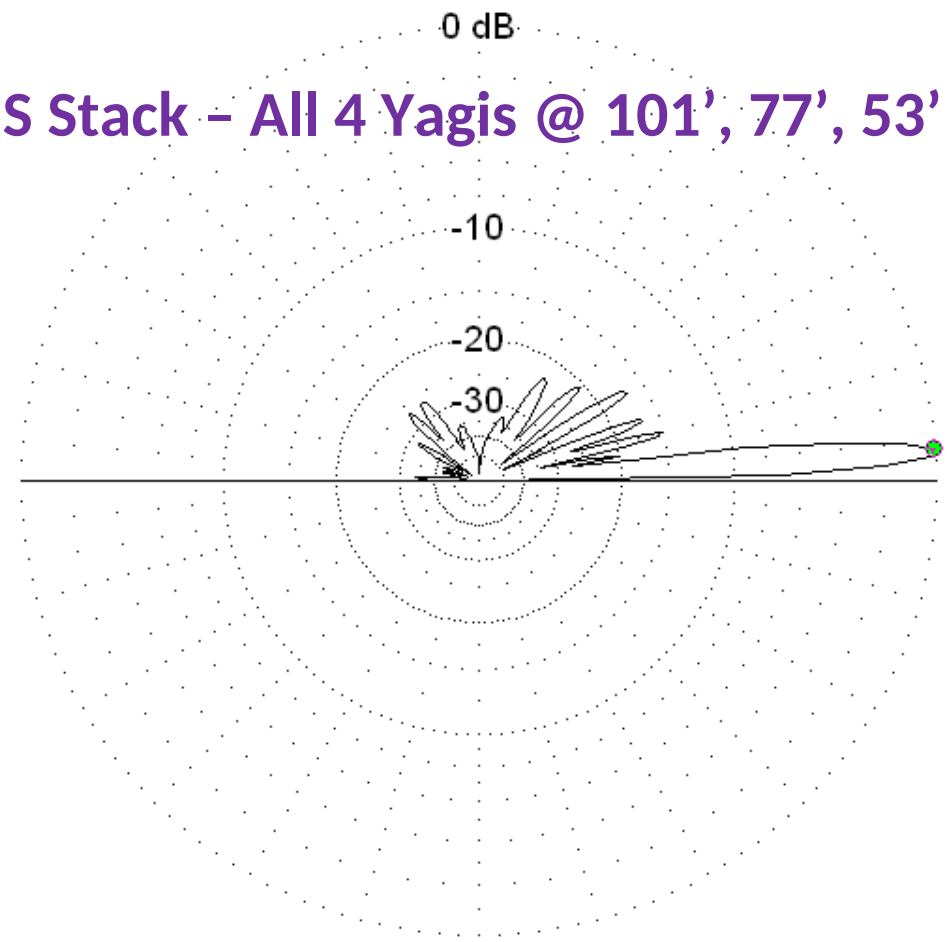

50.2 MHz

Elevation Plot
Azimuth Angle 0.0 deg.
Outer Ring 23.05 dBi

Slice Max Gain 23.05 dBi @ Elev Angle = 4.0 deg.
Beamwidth 3.8 deg.; -3dB @ 1.8, 5.6 deg.
Sidelobe Gain 7.84 dBi @ Elev Angle = 15.0 deg.
Front/Sidelobe 15.21 dB

Cursor Elev 4.0 deg.
Gain 23.05 dBi
0.0 dBmax

The Advantage of a Stacked Array

- Can achieve higher gain over a single yagi.
- Control of higher angle lobes that often do not contribute to performance.
- Multiple antennas are effective in controlling QSB (fading). This is very noticeable on the four stack position.
- A vertical stack maintains a wide E plane or horizontal beamwidth over that of single long yagis to achieve the same (or better) forward gain.
- You can play games with arrival angles. You can get rid of the 400-600 mile dead zone.

Pattern Tilt Explained

- For any wave front arriving from an angle above the horizon, that wavefront will contact the topmost yagi in a stack before the bottom one. This normally puts the “combined” signal out of phase. To get a 100% addition in the array, you must delay the signal from the top yagi so that the two signals combine properly. A simple additional length of coax to the top yagi will suffice.

Beam Tilt

- So how long should the cable be?
- Some simple trigonometry will give a ballpark figure for moderate angles.
- Mininec, or EZNEC will calculate it easily. You can specify a phase shift at each driven element.
- A good feature is to have all switches and delay lines indoors. This requires a separate phase matched feedline for each antenna.

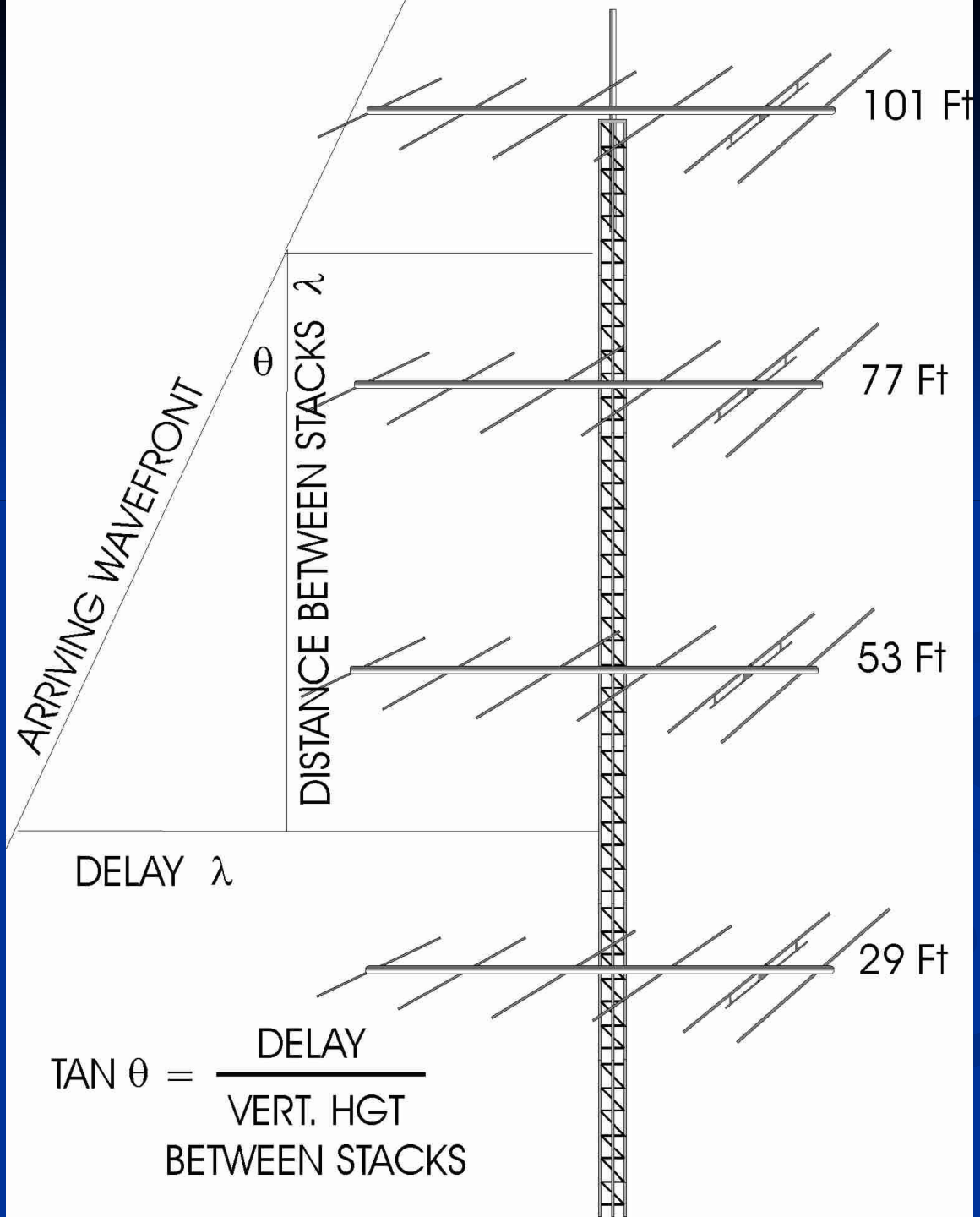
101 Ft
77 Ft
53 Ft
29 Ft
ARRIVING WAVEFRONT
θ
DISTANCE BETWEEN STACKS λ
DELAY λ
TAN θ = DELAY / VERT. HGT BETWEEN STACKS

Arrival Angles

101 Ft.	1.5-4.1 degrees	18.75 dBi
77 Ft.	1.8-5.4 degrees	18.88 dBi
101 & 77 Ft.	1.7-4.5 degrees	21.7 dBi
All four	1.8-5.3 degrees	23.1 dBi
All four tilt	6.7-10.6 degrees	22.0 dBi
53 & 29 Ft.	3.0-9.4 degrees	20.72 dBi
29 Ft. only	4.4-14 degrees	18.3 dBi

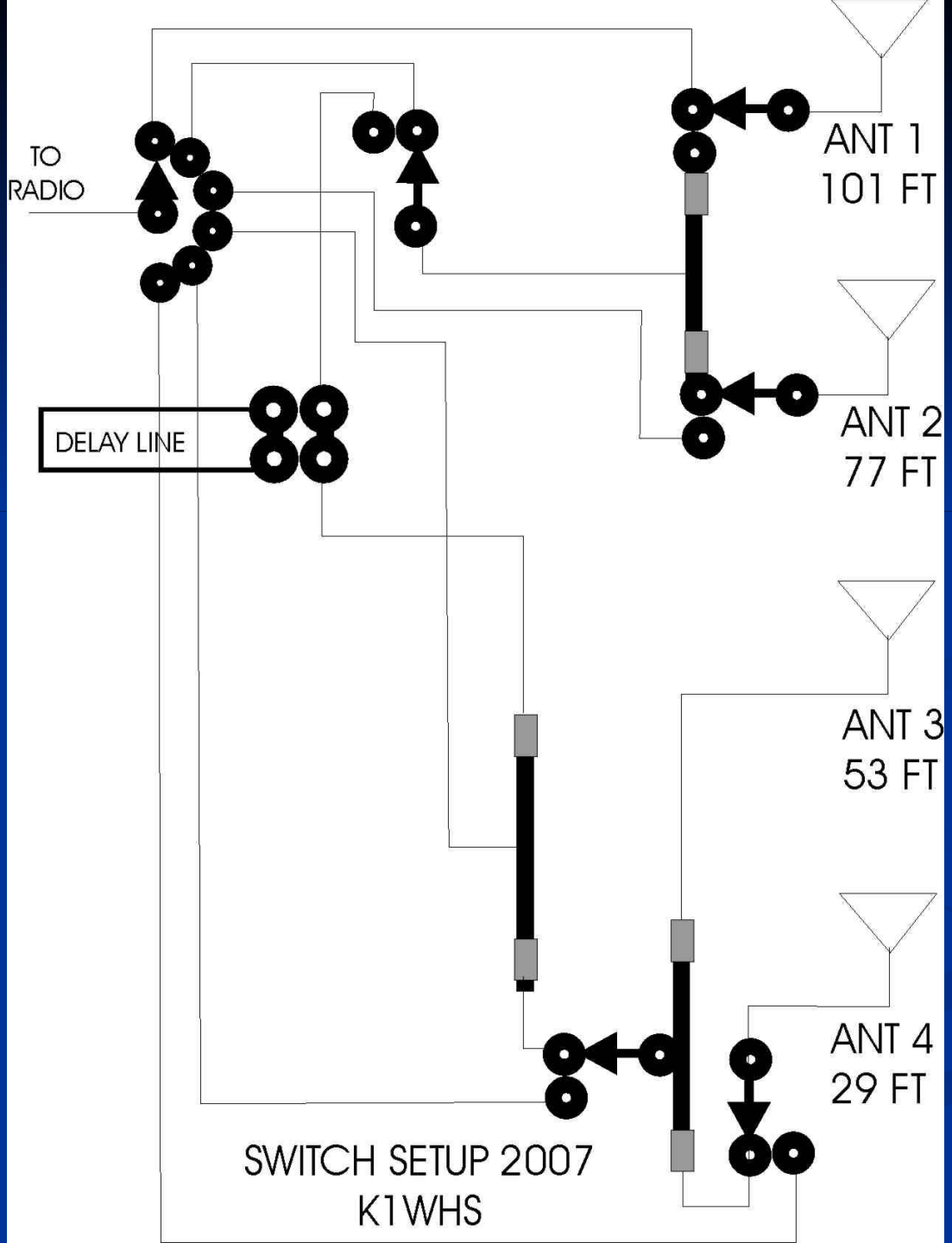
TO
RADIO
DELAY LINE
ANT 1
101 FT
ANT 2
77 FT
ANT 3
53 FT
ANT 4
29 FT
SWITCH SETUP 2007
K1WHS

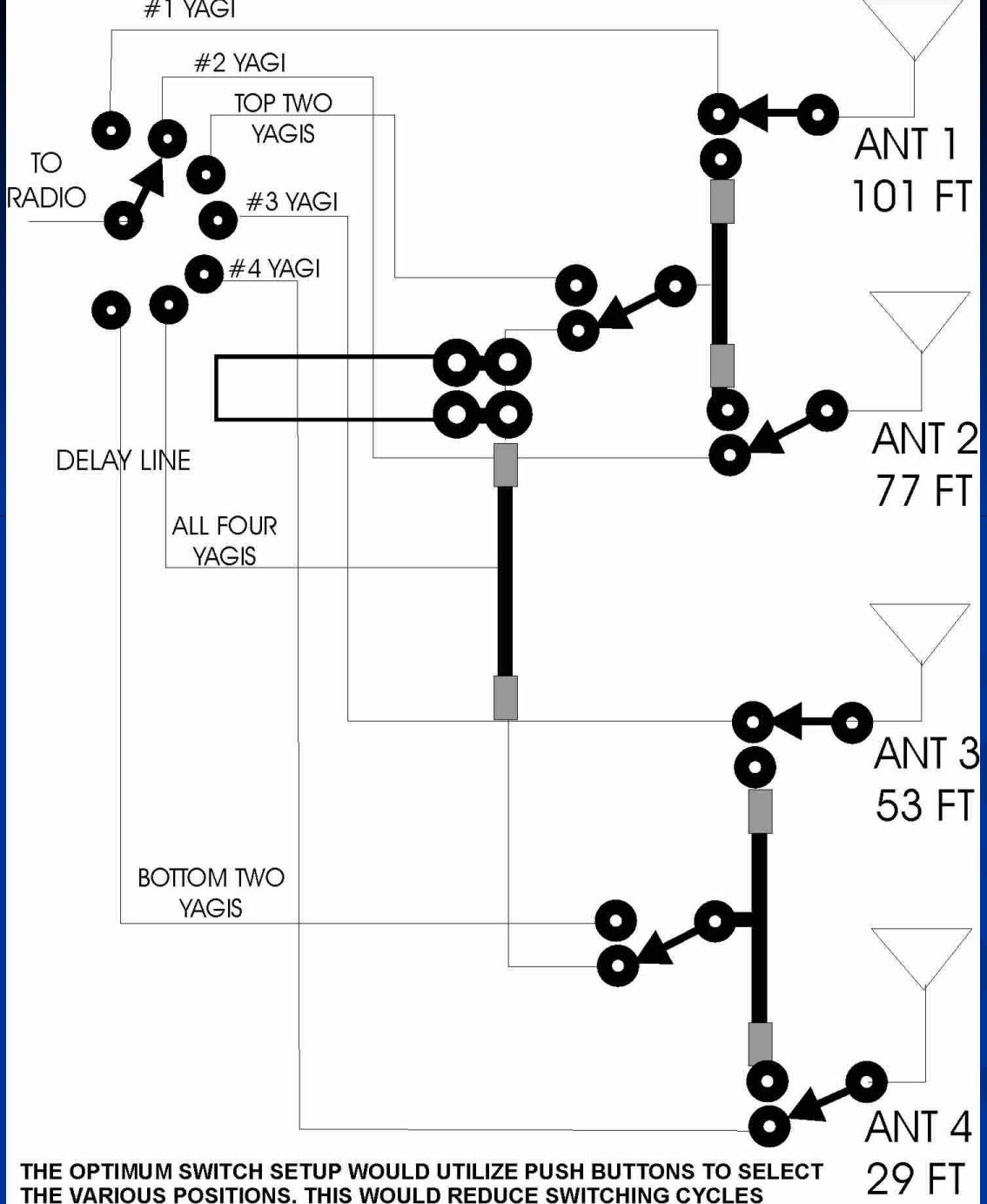

THE OPTIMUM SWITCH SETUP WOULD UTILIZE PUSH BUTTONS TO SELECT THE VARIOUS POSITIONS. THIS WOULD REDUCE SWITCHING CYCLES COMPARED TO USING A ROTARY SWITCH, AND RESULT IN LESS WEAR AND

* Total Field

EZNEC+

K1WHS Stack – All 4 Yagis with 180° delay to top 2

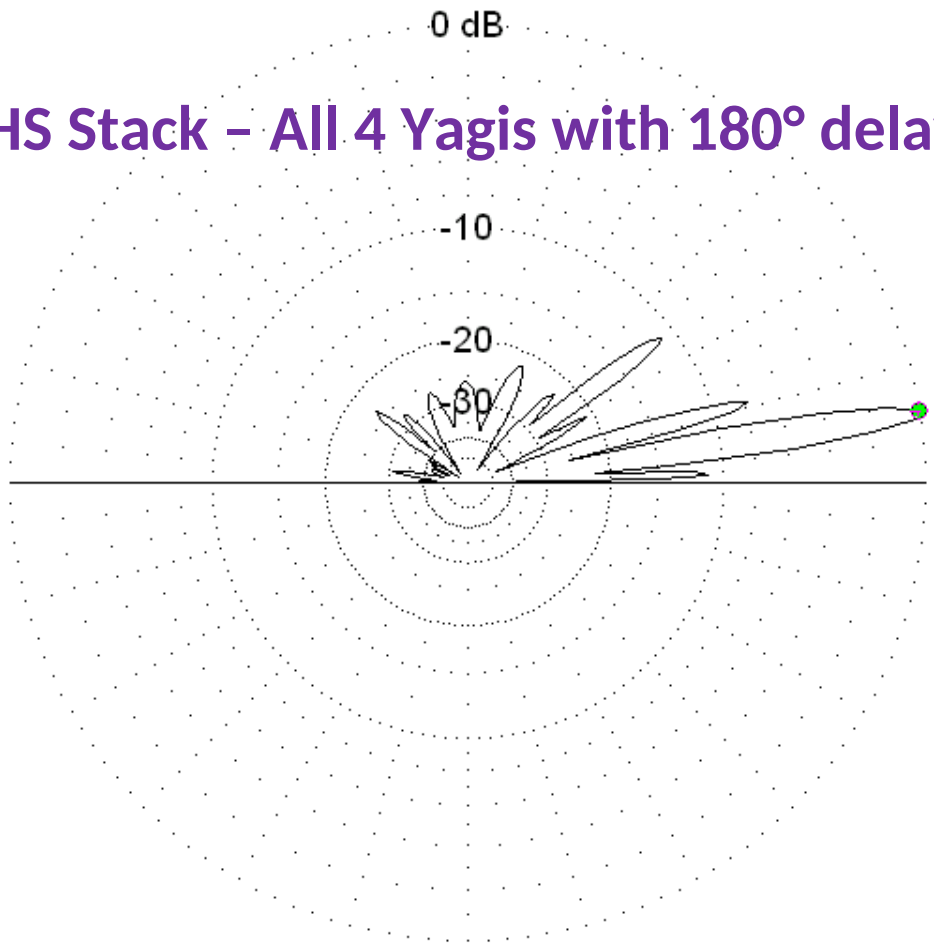

50.2 MHz

Elevation Plot
Azimuth Angle 0.0 deg.
Outer Ring 21.99 dBi

Slice Max Gain 21.99 dBi @ Elev Angle = 9.0 deg.
Beamwidth 3.9 deg.; -3dB @ 6.7, 10.6 deg.
Sidelobe Gain 14.23 dBi @ Elev Angle = 16.0 deg.
Front/Sidelobe 7.77 dB

Cursor Elev 9.0 deg.
Gain 21.99 dBi
0.0 dBmax

* Total Field

EZNEC+

K1WHS Stack – All 4 Yagis @ 101', 77', 53' and 29'

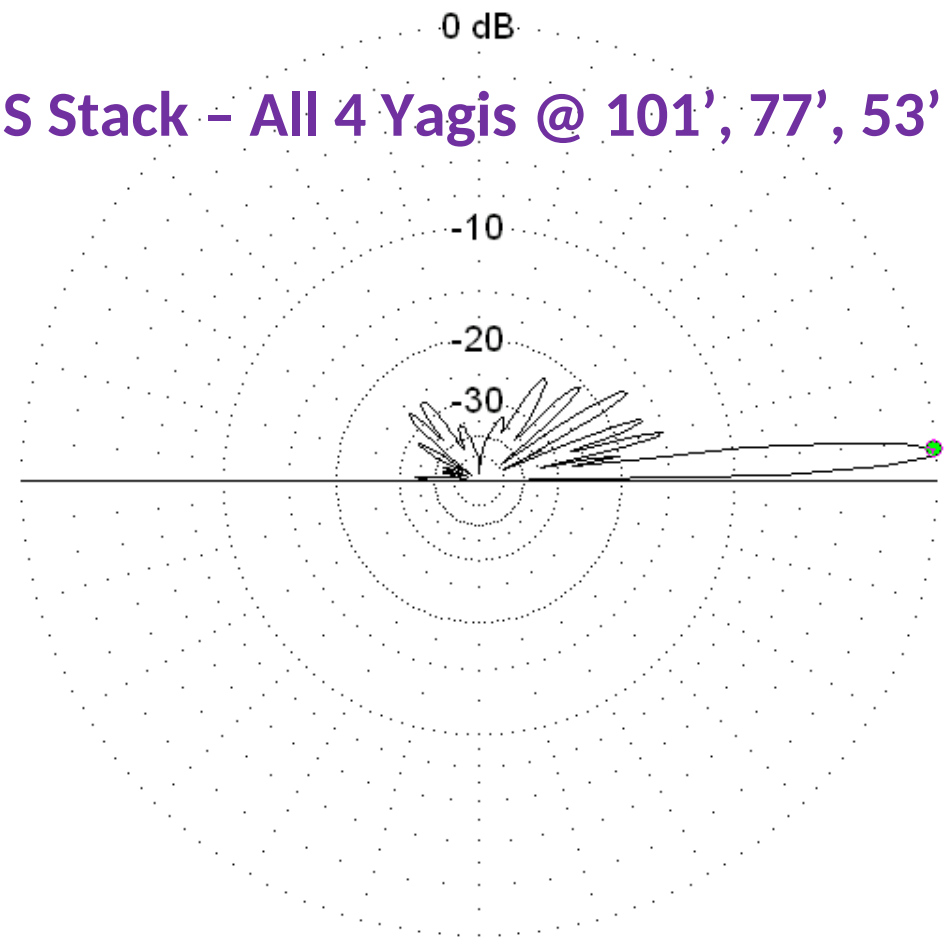

50.2 MHz

Elevation Plot
Azimuth Angle 0.0 deg.
Outer Ring 23.05 dBi

Slice Max Gain 23.05 dBi @ Elev Angle = 4.0 deg.
Beamwidth 3.8 deg.; -3dB @ 1.8, 5.6 deg.
Sidelobe Gain 7.84 dBi @ Elev Angle = 15.0 deg.
Front/Sidelobe 15.21 dB

Cursor Elev 4.0 deg.
Gain 23.05 dBi
0.0 dBmax







* Total Field

EZNEC+

K1WHS Stack - 29’ Yagi only

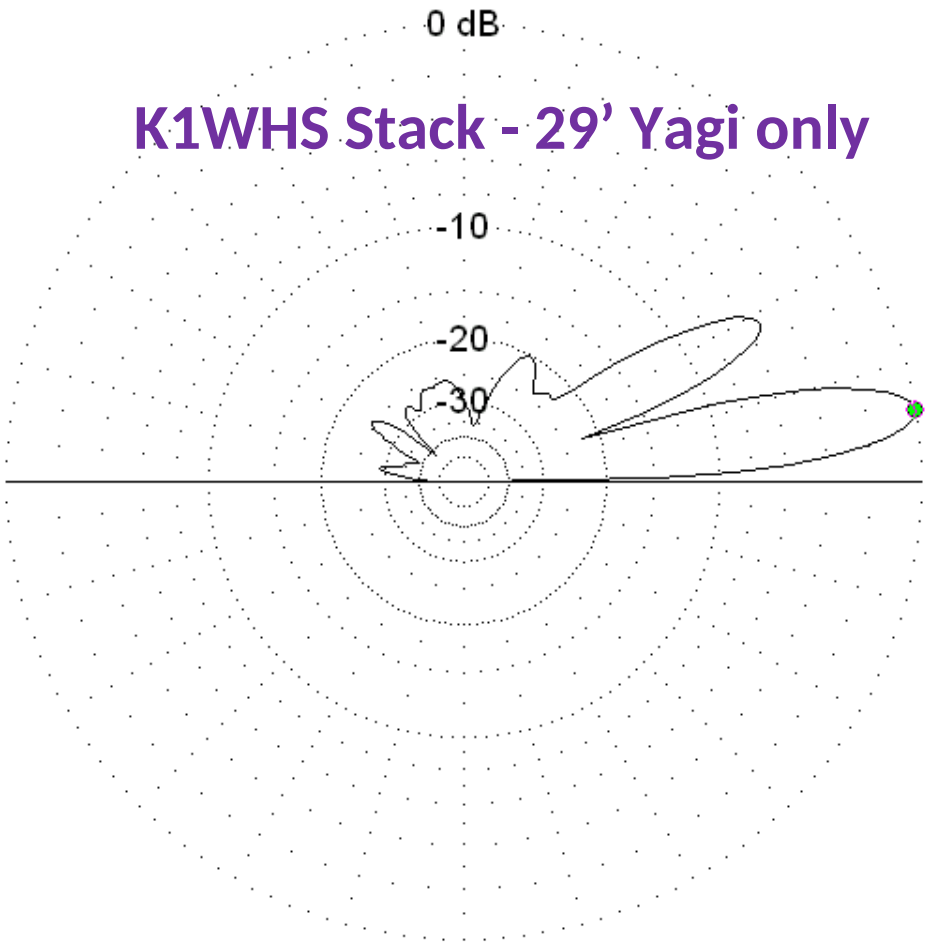

50.2 MHz

Elevation Plot	
Azimuth Angle	0.0 deg.
Outer Ring	18.27 dBi
Slice Max Gain	18.27 dBi @ Elev Angle = 9.0 deg.
Beamwidth	9.6 deg.; -3dB @ 4.4, 14.0 deg.
Sidelobe Gain	12.96 dBi @ Elev Angle = 28.0 deg.
Front/Sidelobe	5.3 dB

Cursor Elev	9.0 deg.
Gain	18.27 dBi
	0.0 dBmax

* Total Field

EZNEC+

K1WHS Stack – Bottom 2 only with 180° delay

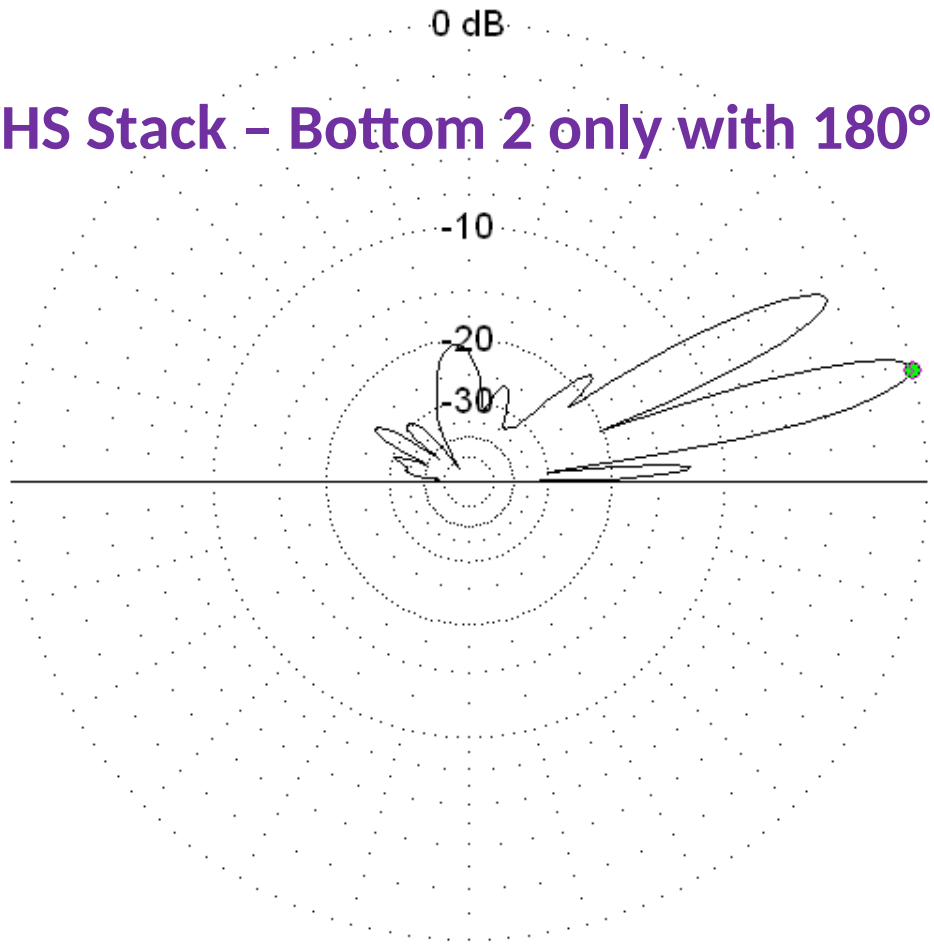

50.2 MHz

Elevation Plot
Azimuth Angle 0.0 deg.
Outer Ring 18.73 dBi

Slice Max Gain 18.73 dBi @ Elev Angle = 14.0 deg.
Beamwidth 6.6 deg.; -3dB @ 10.9, 17.5 deg.
Sidelobe Gain 16.48 dBi @ Elev Angle = 27.0 deg.
Front/Sidelobe 2.25 dB

Cursor Elev 14.0 deg.
Gain 18.73 dBi
0.0 dBmax

otal Field

EZNEC+

YAGIS 1 &3 180 degree delay

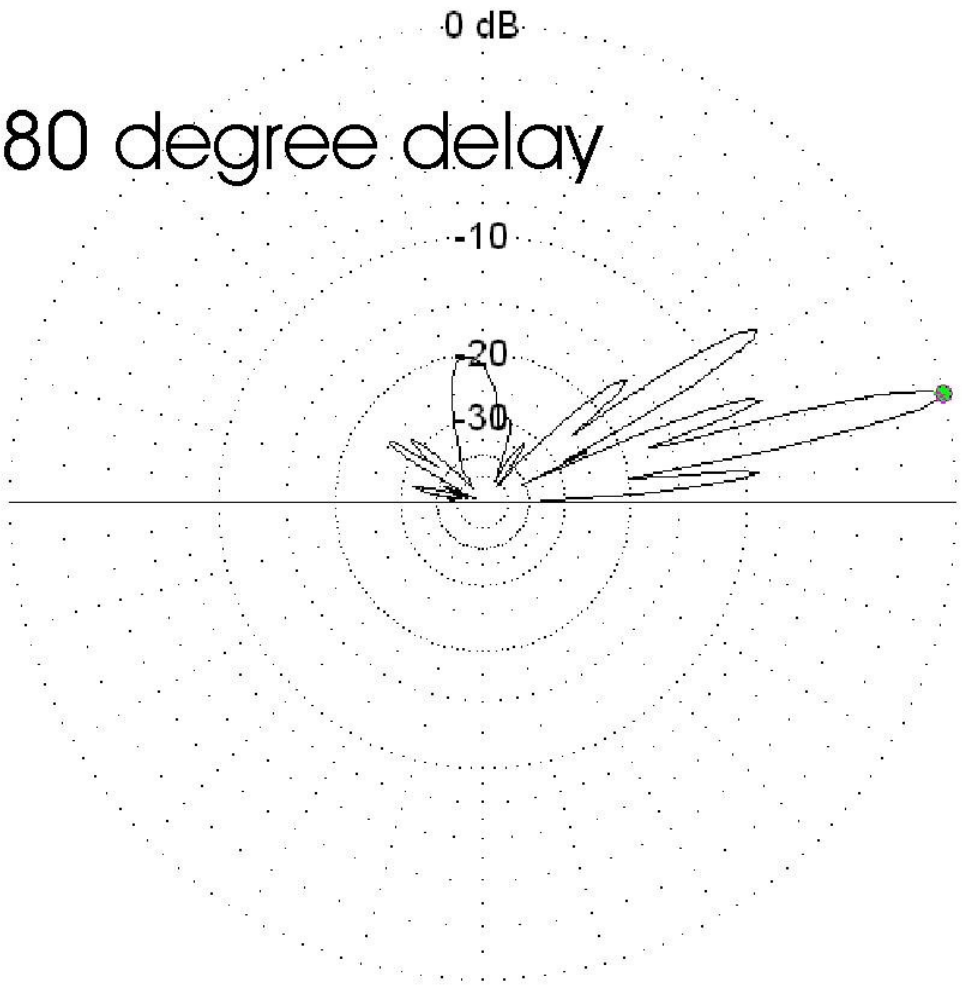

50.2 MHz

tion Plot
uth Angle 0.0 deg.
r Ring 21.34 dBi

Max Gain 21.34 dBi @ Elev Angle = 13.0 deg.
nwidth 4.0 deg.; -3dB @ 11.1, 15.1 deg.
obe Gain 14.72 dBi @ Elev Angle = 32.0 deg.
/Sidelobe 6.63 dB

Cursor Elev 13.0 deg.
Gain 21.34 dBi
0.0 dBmax

* Total Field

EZNEC+

K1WHS Stack – All 4 Yagis with 180° delay on 29’ and 77’

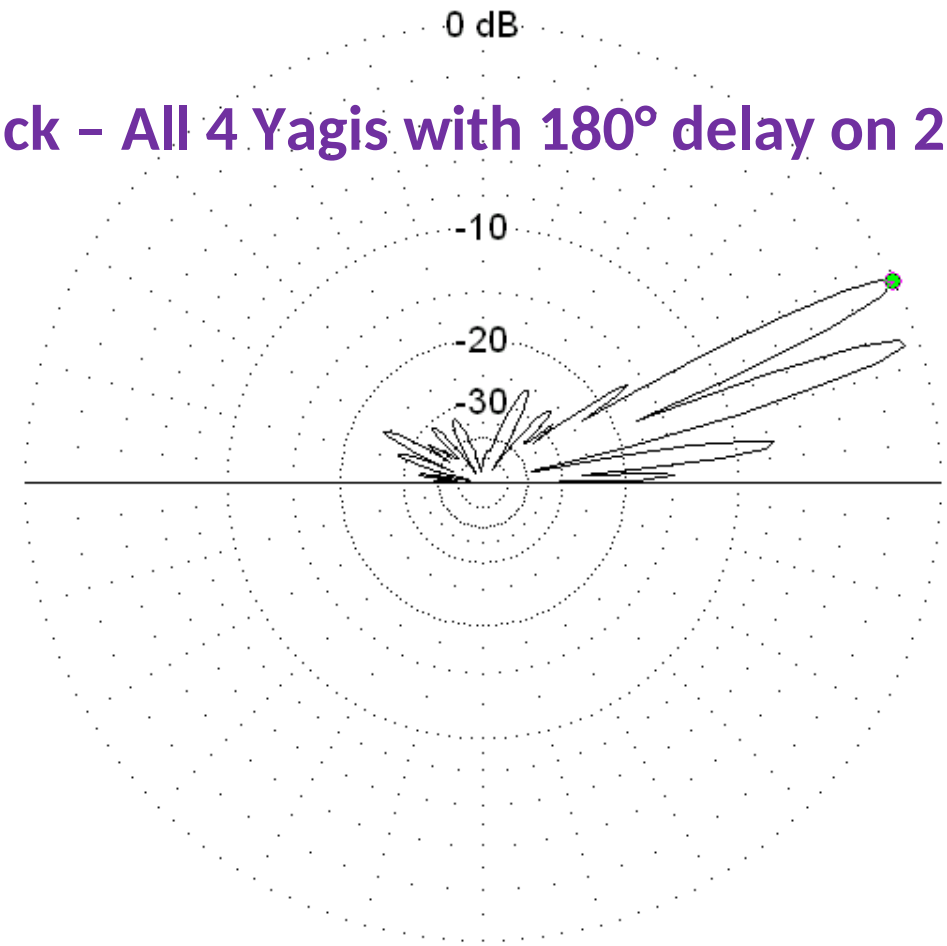

50.2 MHz

Elevation Plot
Azimuth Angle 0.0 deg.
Outer Ring 19.82 dBi

Slice Max Gain 19.82 dBi @ Elev Angle = 26.0 deg.
Beamwidth 4.4 deg.; -3dB @ 24.0, 28.4 deg.
Sidelobe Gain 19.31 dBi @ Elev Angle = 18.0 deg.
Front/Sidelobe 0.51 dB

Cursor Elev 26.0 deg.
Gain 19.82 dBi
0.0 dBmax


FM43

SOME RESULTS SO FAR

- June 25, 2007 European Es generated SSB pileups that sounded like “whitenoise” for 1 ½ hrs. Only 2 yagis were in operation aimed at EU.
- CQ WW VHF Contest 796 Qs in 179 grids, tops nationwide ahead of K1TOL, K3EAR, K8GP, K2DRH, K5QE & even KA1LMR/ QRP
- ARRL Sept QSO Party. The top 50 MHz score in Northeast ahead of W2SZ, K1TOL, W3SO, etc. but not ahead of K5QE or K8GP. 415 Qs in 84 grids.
- In each of these two contests, this array has proved to be far ahead, gridwise, of any other 50 Mhz setup in the Northeast.

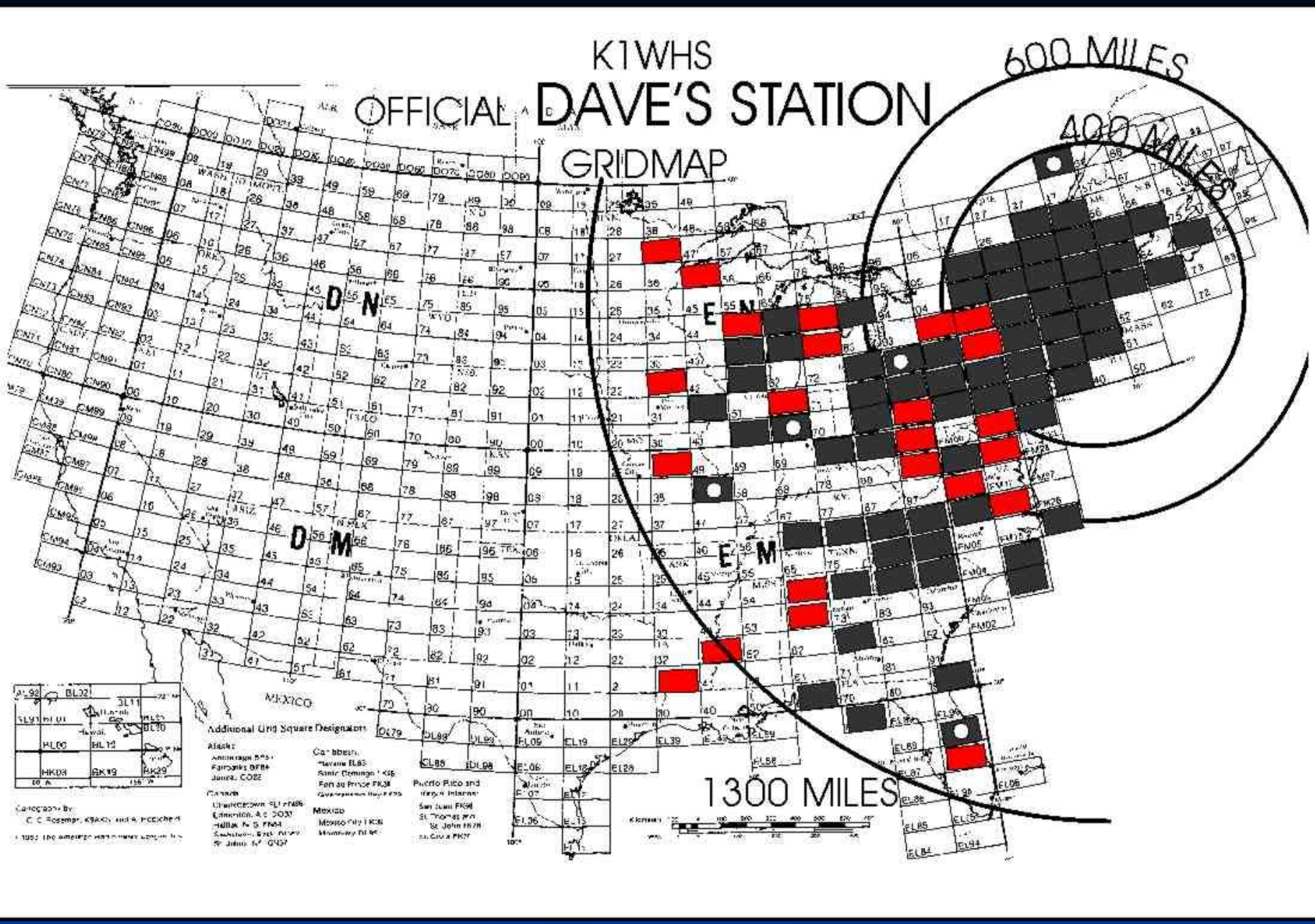
K1WHS
OFFICIAL DAVE'S STATION
GRIDMAP
600 MILES
400 MILES
1300 MILES
D N
D M
E N
E M
MEXICO

LOOK AT GRIDS IN THE 400-600 MILE RANGE

RESULTS SEPTEMBER 2007 CONTEST

- K1WHS worked 20 grids (HB Beamsteering)
- K1TOL worked 12 grids (4 yagis &Stackmaster)

HOW ABOUT 1200-1300 MILES?

- K1TOL worked 12 grids 1200-1300 miles
- K1WHS worked 20 grids 1200-1300 miles

OK, So why is it better than the old array?

- The antennas are 10 ft higher above ground?
- The guy wires are all Phillystran?
- The yagis can all rotate?
- The feedlines are all bigger?
- I eliminated the barn door hinges and phase error they cause while rotating?
- OK, I cut down a few trees. Less attenuation.

- These are all minor things but they all add up!

Features… In Summary

- High gain is possible.
- Wide beamwidth good for for maximizing QSOs.
- Clean H plane pattern is obtained over single yagis.
- Versatile configuration…can aim in multiple directions as conditions warrant.
- Choice of arrival angles to fill in hard 400-600 Mi. dead spot.
- Reduce QSB during Es openings over single long yagis.
- Reduce local QRM and QRN with uptilt choices.
- Re-programmable for future pattern modifications.
- Six meters is fun with this antenna.
- It gets the girls!

