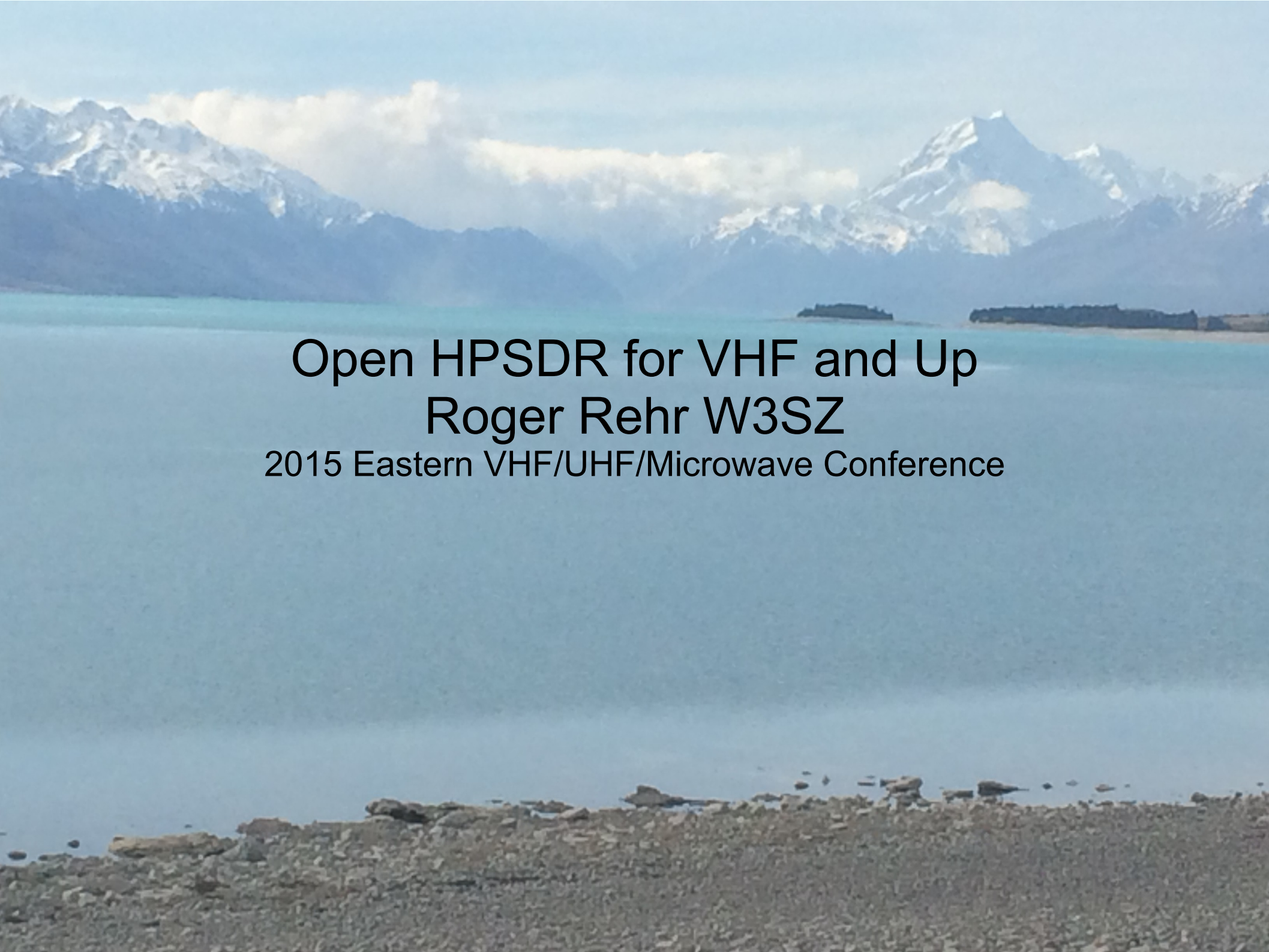

Open HPSDR for VHF and Up

Roger Rehr W3SZ

2015 Eastern VHF/UHF/Microwave Conference

openHPSDR

- Started in 2005
- Includes interested hams world-wide
- Primary motivator: Phil Harman VK6PH
- Hardware and Software
- TAPR has provided seed money, storefront
- Apache Labs
- Each unit covers 10 kHz through 55 MHz
  - Perfect for IF radio for VHF/UHF/Microwave work

OpenHPSDR Hardware

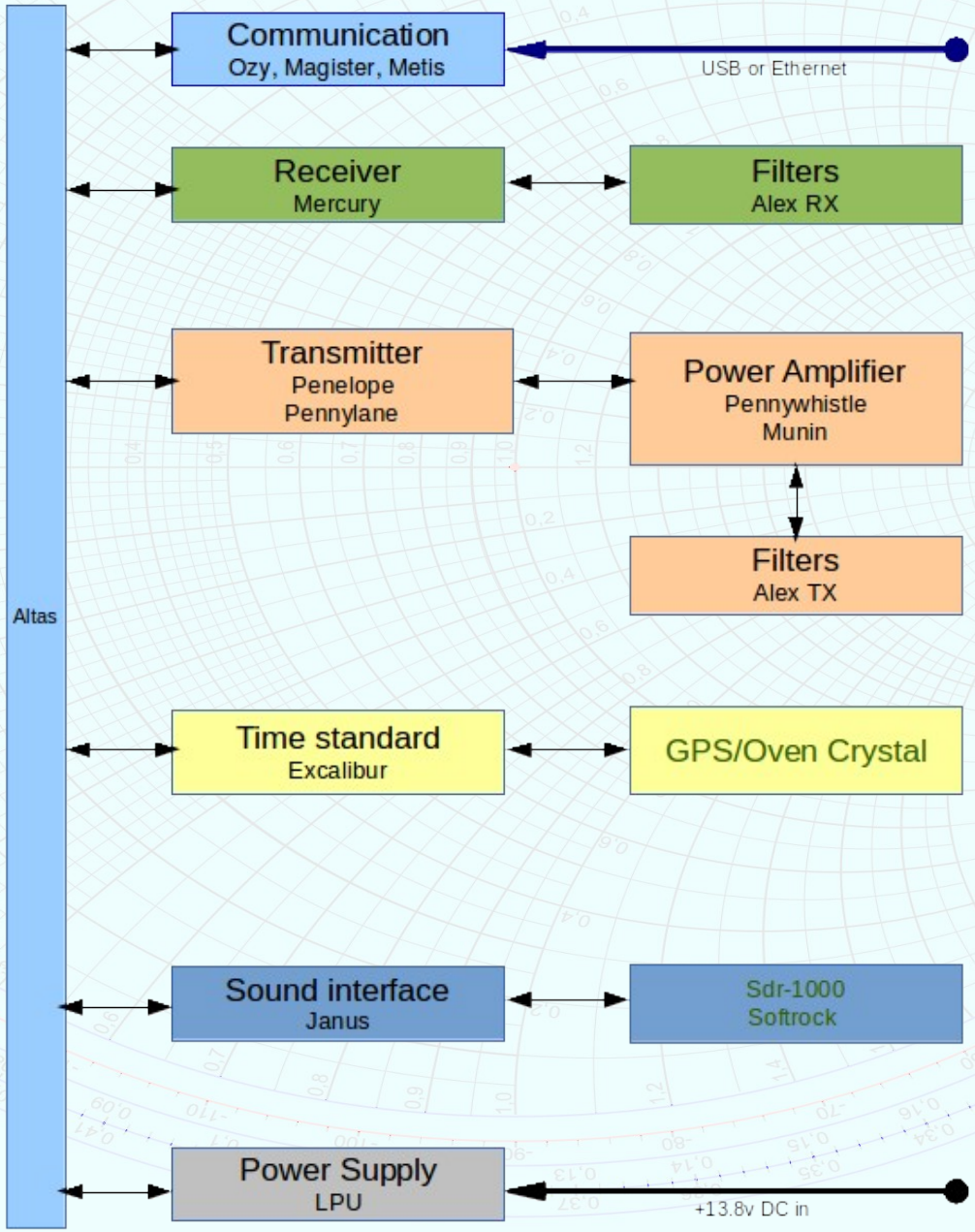

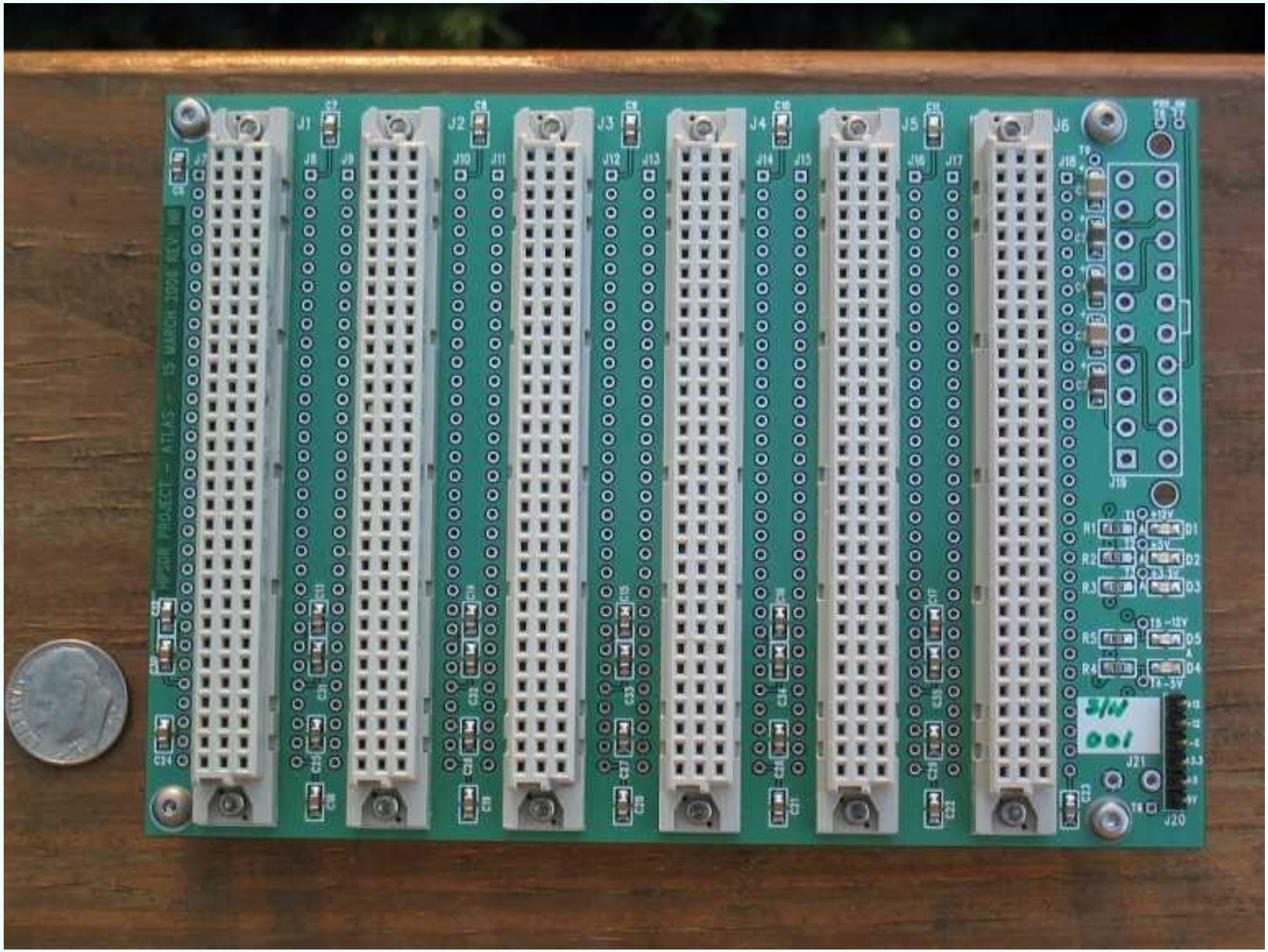
J1
J2
J3
J4
J5
J6
J7
J8
J9
J10
J11
J12
J13
J14
J15
J16
J17
J18
J19
J20
J21
R1
R2
R3
R4
R5
D1
D2
D3
D4
D5
+12V
+5V
+3.3V
-12V
-5V
N/S
001

Mercury Direct DownConversion (DDC) Receiver

Penelope / Pennylane Direct UpConversion (DUC) Transmitter

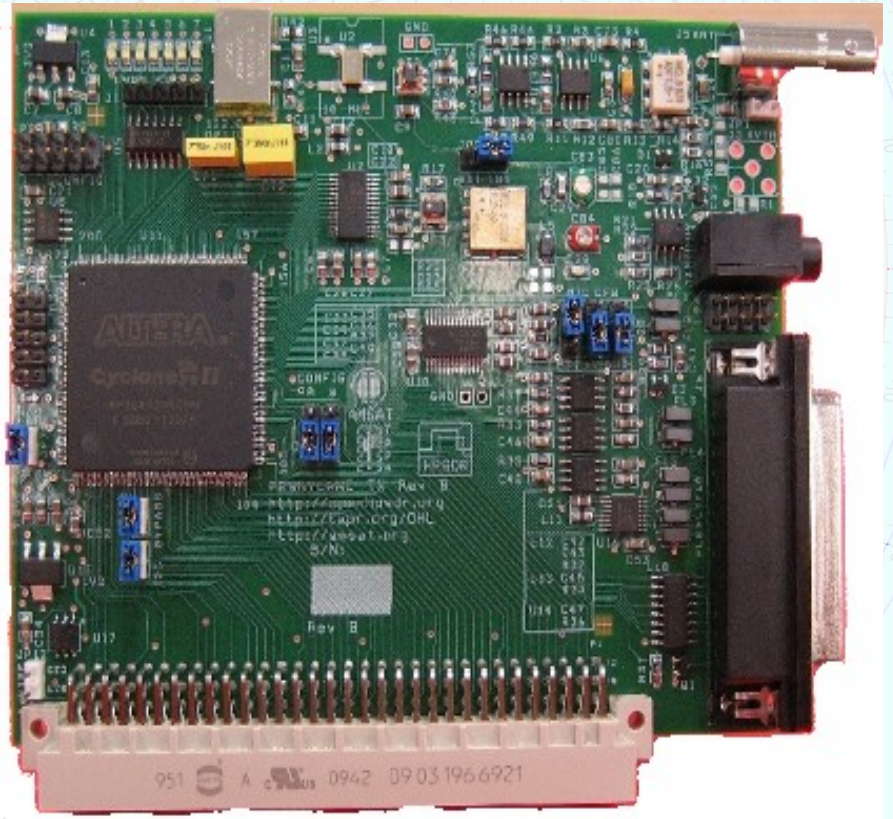

Metis
Ethernet Interface

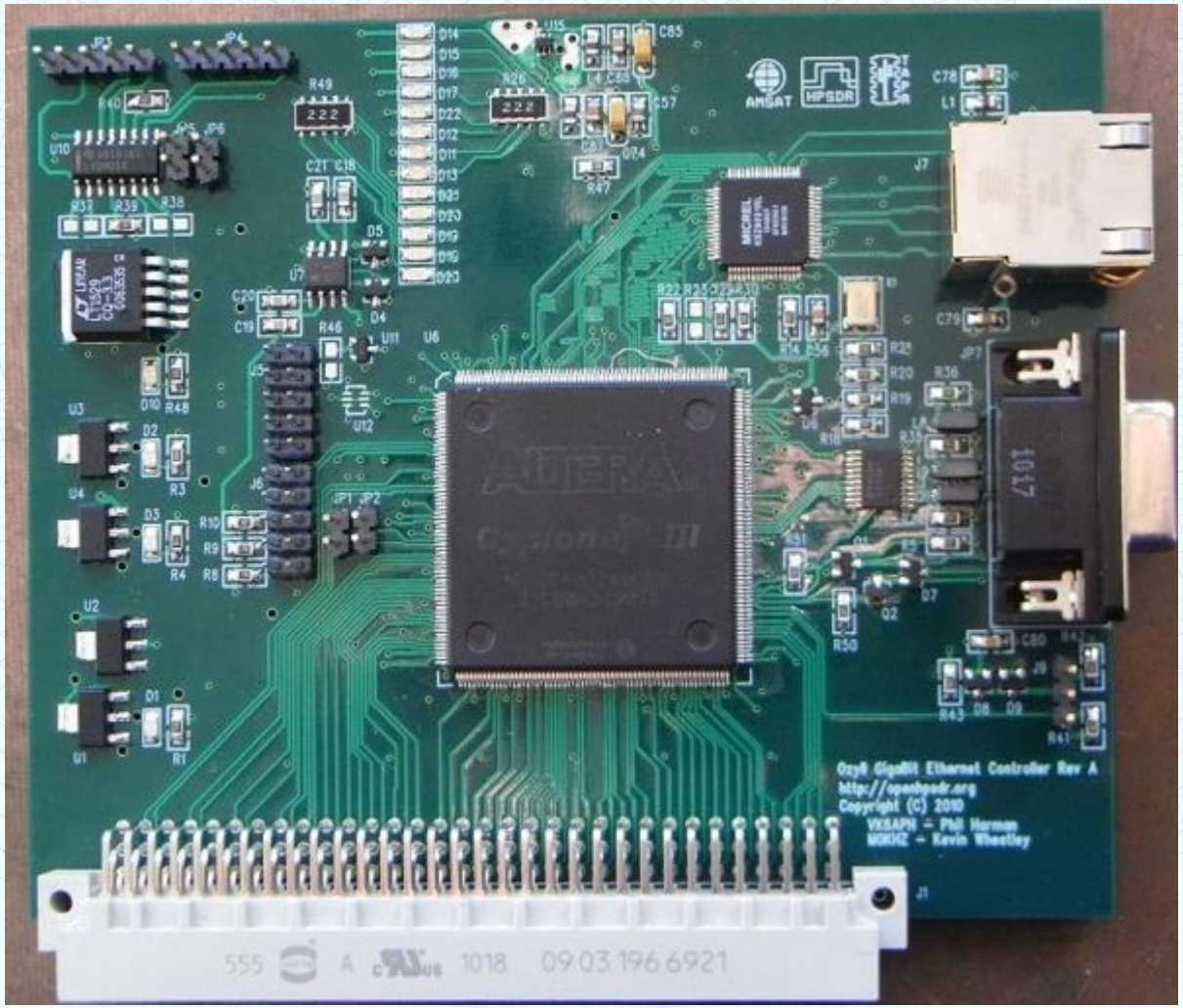

Excalibur
10 MHz Frequency Reference

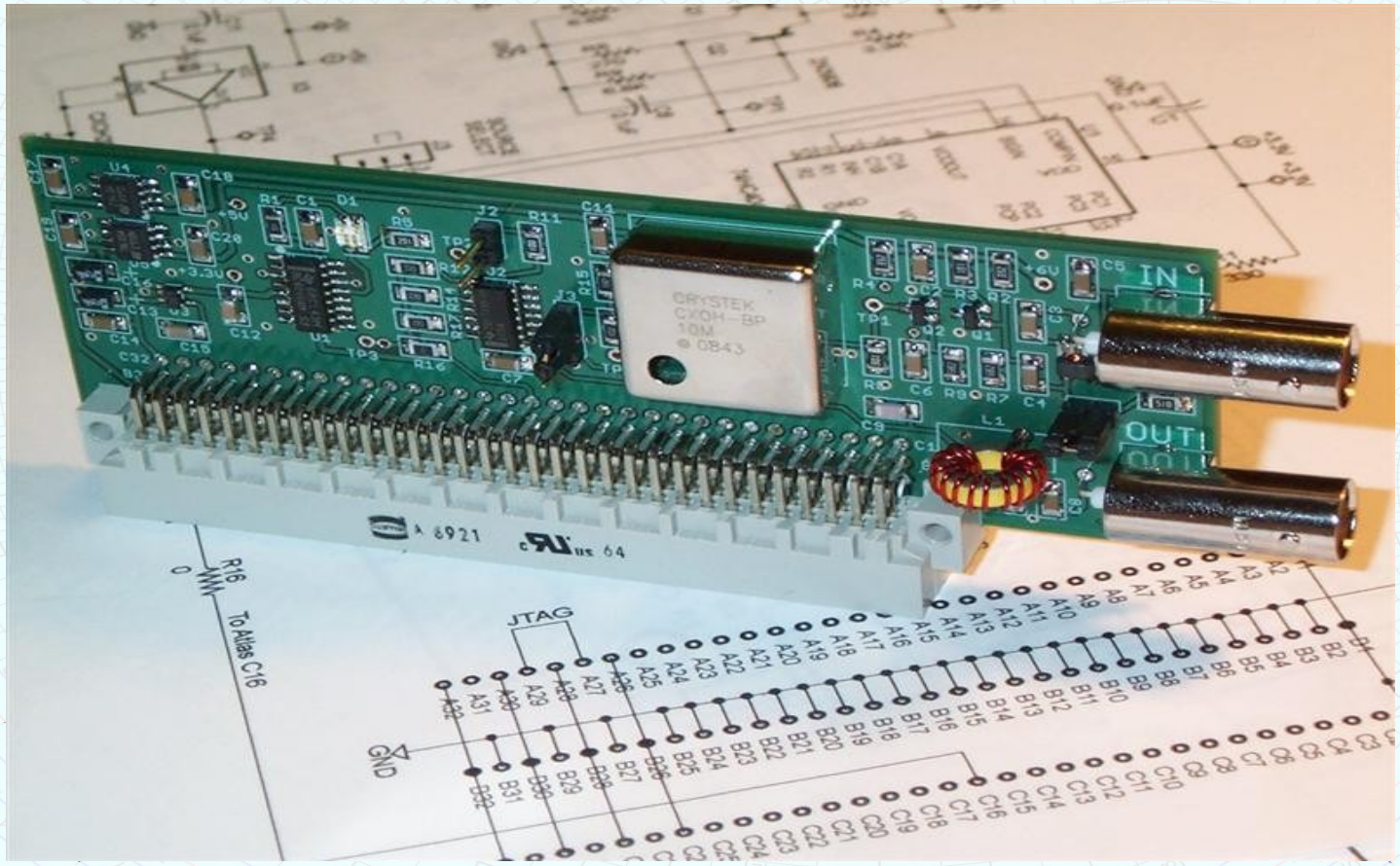

Pandora (cover removed)

OpenHPSDR specifications

- Blocking Dynamic Range: no detectable gain compression below ADC overload
- Dynamic Range 125 dB
- Image Rejection > 110 dB
- Full Duplex
- Transmitter two-tone 3rd order IMD -50 dBc @ 400 mW output
- 500 mW RF output on 160 – 10 m amateur bands, 350 mW on 6 m
- Noise Floor -135 dBm in 500 Hz

Specifications Continued

- Seven user-configurable open collector outputs
- Separate open collector PTT connection
- Stereo outputs at line level and headphone level
- Low phase noise master clock (-140 dBc/Hz @ 1 kHz at 14 MHz)

OpenHPSDR – Next Generation Hermes

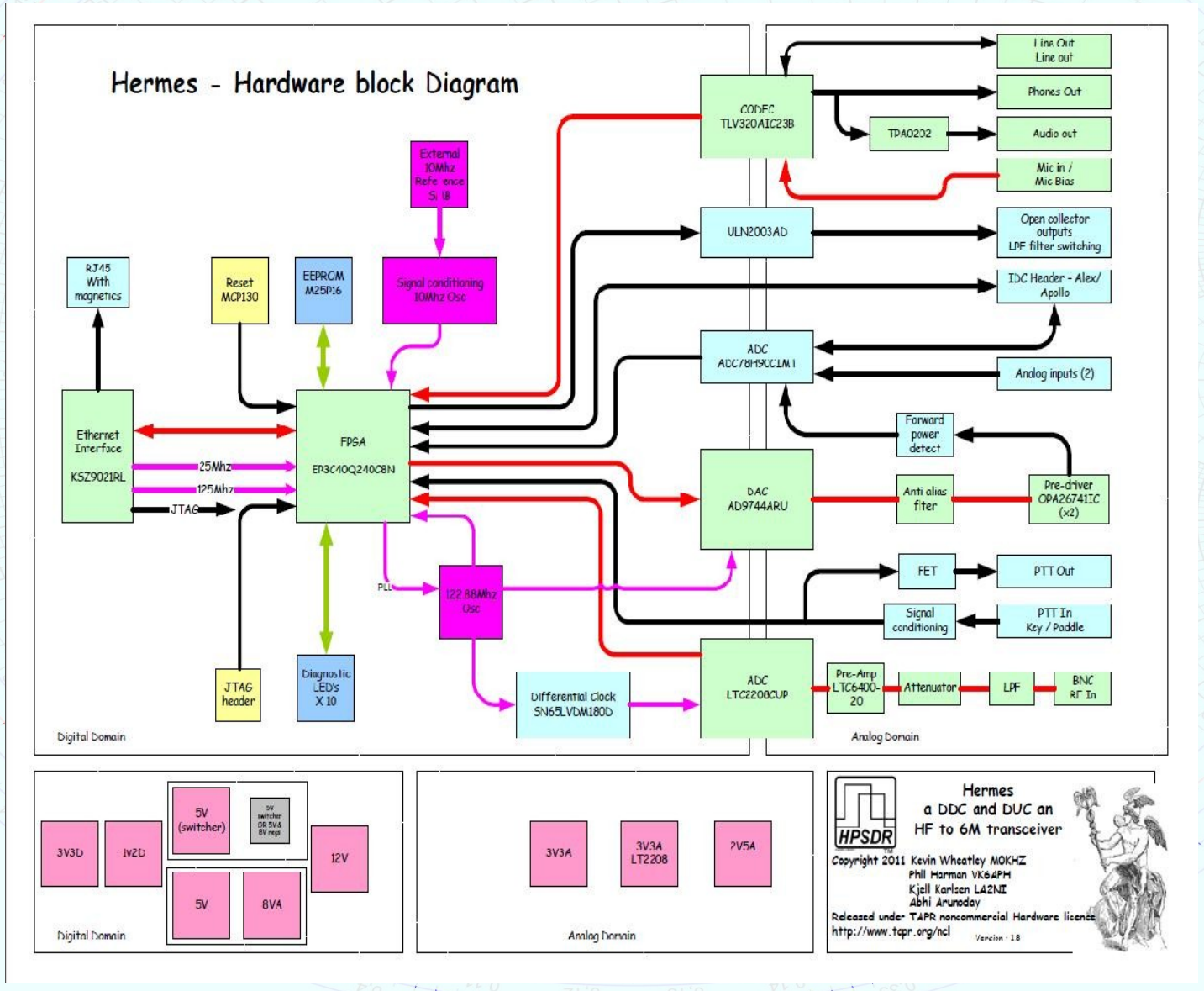

ALTERA
Cyclone III
EP3C40Q240C8N
G HCAAA1225A
CRYSTEK
CVHD-950X
122.880M
1221-01
MICREL
KSZ8021RL
LINEAR
LT1529
CQ-3.3
6605444-6
AD9744
ARUZ
LTC2208
U27
U28
U29
U30
U31
U32

APACHE LABS
www.apache-labs.com
ANAN-10
HF + 6M SDR Transceiver
MIC HEADPHONE KEY
LAN
FAIRGATE
8 THS

Hermes Specifications

- Same as Mercury / Penelope or Pennylane combination
  - Blocking Dynamic Range: no detectable gain compression below ADC overload
  - Dynamic Range 125 dB
  - Image Rejection > 110 dB
  - Full Duplex
  - Transmitter two-tone 3rd order IMD -50 dBc @ 400 mW output
  - 500 mW RF output on 160 – 10 m amateur bands, 350 mW on 6 m
  - Noise Floor -135 dBm in 500 Hz

Hermes VNA

0-55+ MHz

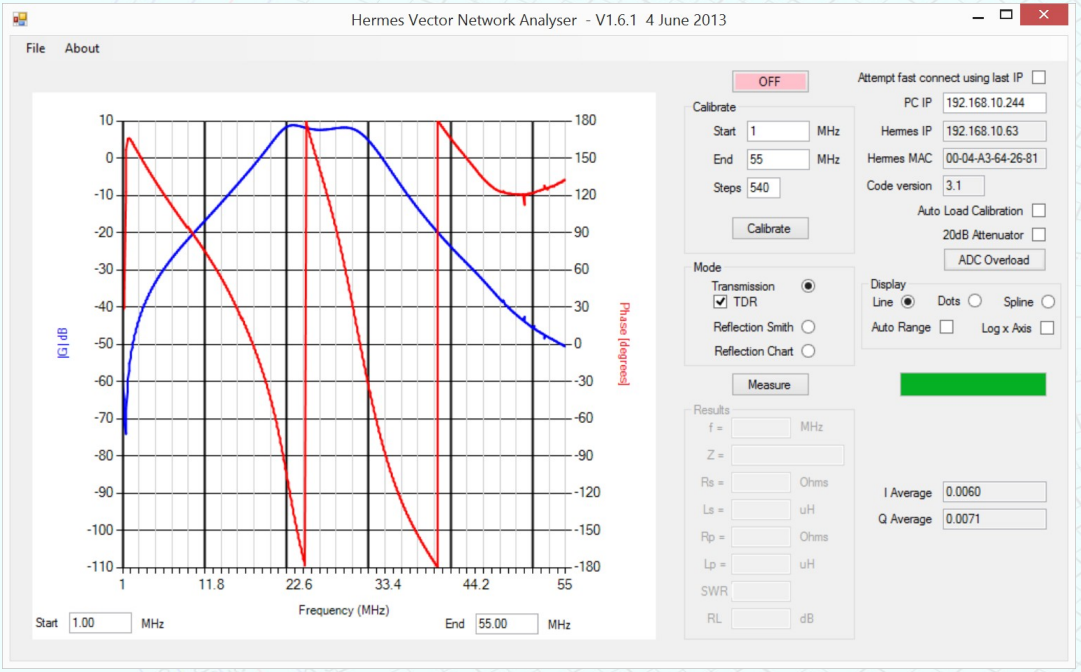

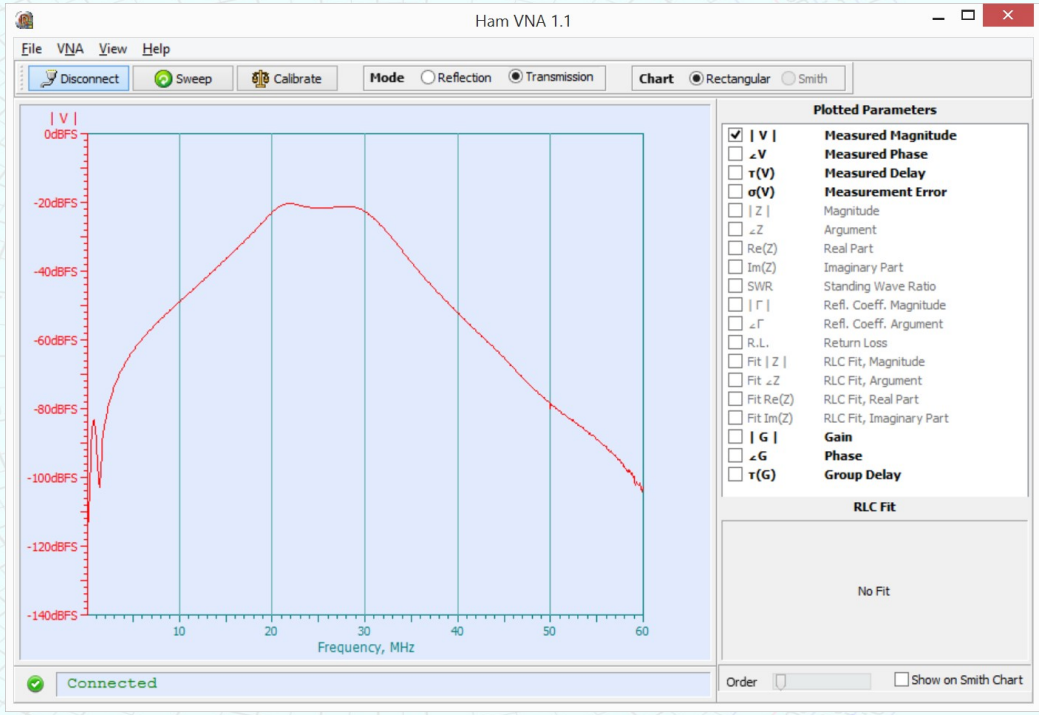

Hermes VNA

Dummy Load SWR / RL

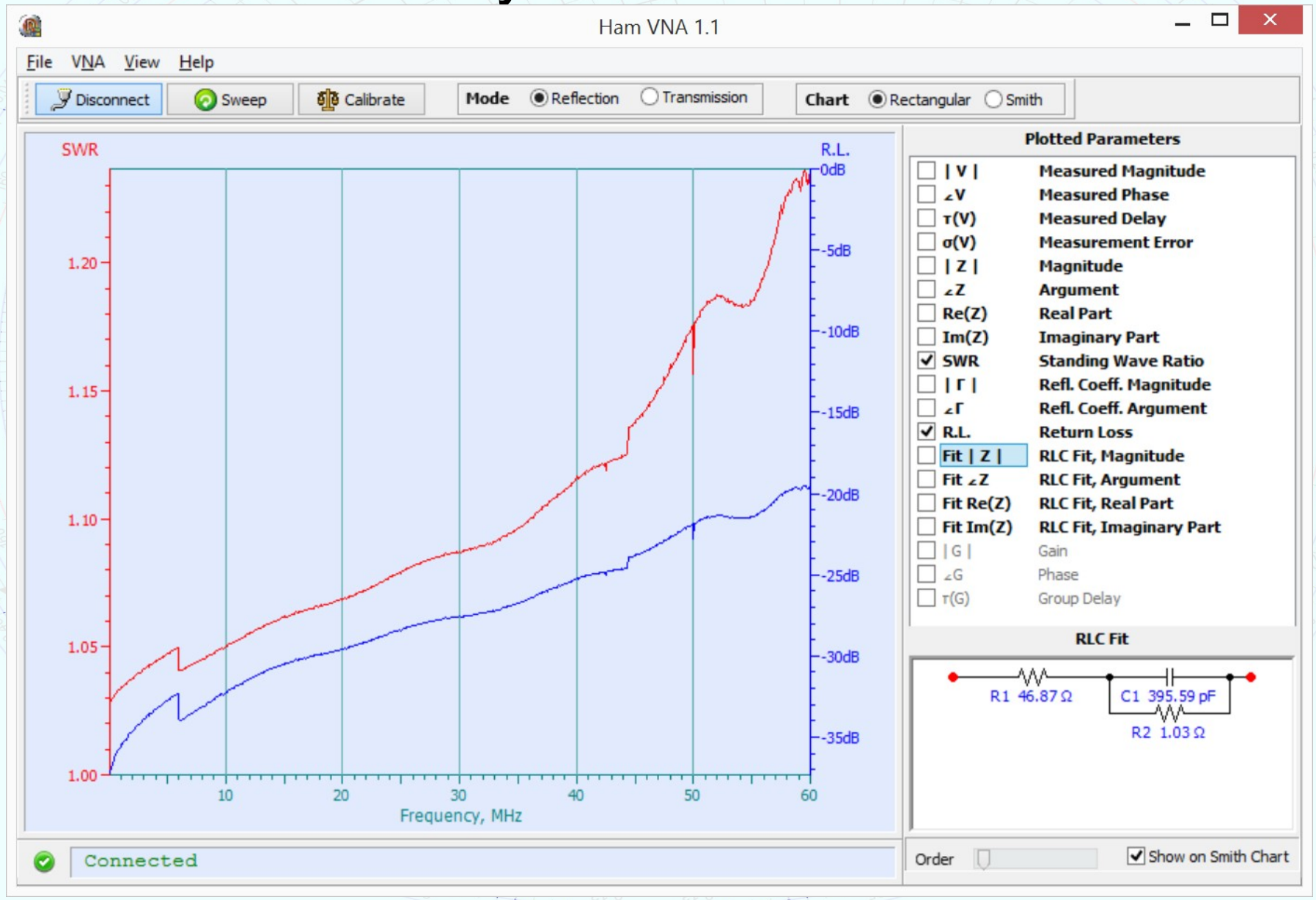

Hermes VNA

23 year old 14 AVQ SWR / RL

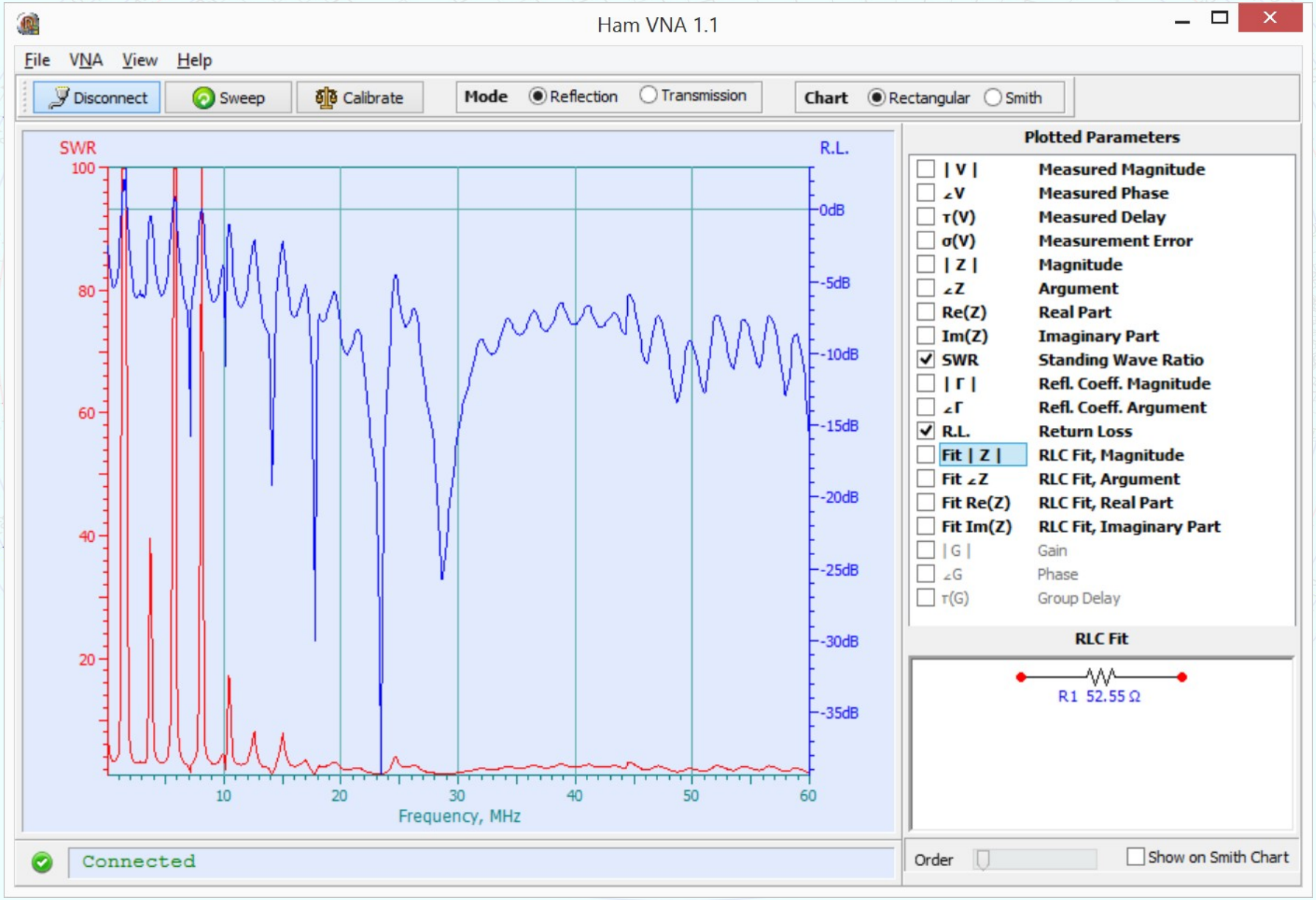

Hermes VNA
14AVQ Smith Chart

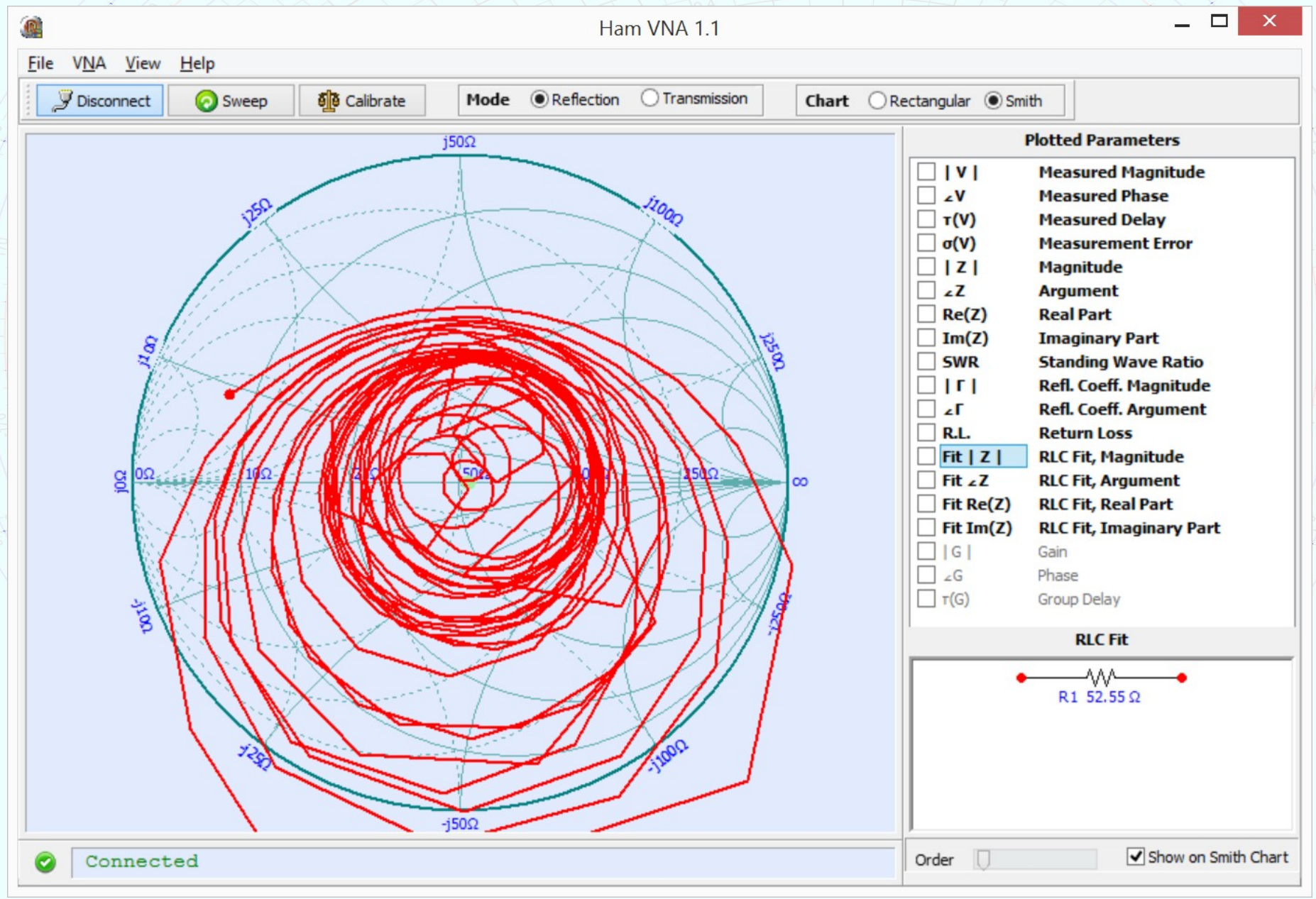

Apache Labs

apache-labs.com

- “Abhi”, Abhishek Arunoday Prakash
  - Did the PCB Design for Hermes
- Based in India
- Extremely good customer support
- Product line includes
  - Hermes $895
  - ANAN Series $995 to $4289
  - Angelia $1495
  - PCBs for Hermes, Angelia, Enclosures

SPECIFICATIONS & HIGHLIGHTS

	ANAN-10	ANAN-100	ANAN-100D	ANAN-200D
Pricing	US$ 1679.00	US$ 2489.00	US$3489	US$4289
Warranty	2Year Limited Manufacturer's Warranty*	2Year Limited Manufacturer's Warranty*	2Year Limited Manufacturer's Warranty*	2Year Limited Manufacturer's Warranty*
FPGA	EP3C40	EP3C40	EP4CE115	EP4CGX150
Logic Elements	40K	40K	115K	150K
On Board DSP Processing Capability	Yes (limited by FPGA LEs)	Yes (limited by FPGA LEs)	Extensive, including optional Soft Core	Extensive, including optional Soft Core
FLASH RAM	16MB	16MB	128MB	128MB
SRAM	-	-	32Mbit	32Mbit
Master Clock	122.88MHz	122.88MHz	122.88MHz	122.88MHz
CLOCK Phase Noise @ 10KHz	-149dBc	-149dBc	-149dBc	-149dBc
10MHz Reference TCXO	±2.5PPM	±0.1PPM	±0.1PPM	±0.1PPM
External 10Mhz Reference Input	Yes	Yes	Yes	Yes
Ethernet	GIGABIT	GIGABIT	GIGABIT	GIGABIT
Modes	AM,FM,RTTY,CW,LSB,USB, DIGITAL (limited only by the application software)	AM,FM,RTTY,CW,LSB,USB, DIGITAL (limited only by the application software)	AM,FM,RTTY,CW,LSB,USB, DIGITAL (limited only by the application software)	AM,FM,RTTY,CW,LSB,USB, DIGITAL (limited only by the application software)
Frequency Step	1 Hz	1 Hz	1 Hz	1 Hz
Antenna Ports(50 Ω)	3	3	3+1	3+1
I/O's	Seven User-Configurable Open-collector outputs Four user- configurable 12 bit buffered Analogue inputs	Seven User-Configurable Open-collector outputs Four user- configurable 12 bit buffered Analogue inputs	Seven User-Configurable Open-collector outputs Four user- configurable 12 bit buffered Analogue inputs	Seven User-Configurable Open-collector outputs Four user- configurable 12 bit buffered Analogue inputs
VNA	10Khz - 55Mhz VNA	10Khz - 55Mhz VNA	10Khz - 55Mhz VNA	10Khz - 55Mhz VNA
Housing	Extruded Aluminum Rugged Housing	Customized Rugged Rack Mount Style Housing	Customized Rugged Rack Mount Style Housing	Customized Rugged Rack Mount Style Housing
Dimensions(W×D×H)	135mm ×160mm ×68mm	448mm ×242mm ×88mm	448mm ×242mm ×88mm	448mm ×242mm ×88mm
Weight	1.5Kg (Approx)	4.5Kg (Approx)	4.5Kg (Approx)	4.5Kg (Approx)

RECEIVER				
Architecture	Direct Down Conversion	Direct Down Conversion	Direct Down Conversion	Direct Down Conversion
Number of ADC'S	1	1	2	2
Number of Receivers**	4	4	7	7
ADC Resolution	16 BIT	16 BIT	16 BIT	16 BIT
Frequency Coverage	10 KHz- 55 MHz	10 KHz- 55 MHz	10 KHz- 55 MHz	10 KHz- 55 MHz
Dynamic Range	125 dBm	125dBm	125dBm	125dBm
Diversity Reception	No	No	Yes	Yes
MDS @ 14.2MHz (500Hz Bandwidth)	-138 dBm	-138 dBm	-138 dBm	-138 dBm
Preamplifier	20 dB	20dB + LNA for 6M	20dB + LNA for 6M	20dB + LNA for 6M
Attenuator	Software selectable 31dB in 1dB steps	Software selectable 31dB in 1dB steps	Software selectable 31dB in 1dB steps	Software selectable 31dB in 1dB steps
Spurious and Image rejection	Greater than 100 dB	Greater than 100 dB	Greater than 100 dB	Greater than 100 dB
Audio Amplifier	1W @ 8Ω	1W @ 8Ω	1W @ 8Ω	1W @ 8Ω
TRANSMITTER				
Architecture	Direct Up Conversion	Direct Up Conversion	Direct Up Conversion	Direct Up Conversion
Number of DAC's	1	1	1	1
RF Output	1-10W	1-100W	1-100W	1-100W
Coverage	160M-6M	160M-6M	160M-6M	160M-6M
Modes	AM,FM,RTTY,CW,LSB,USB, DIGITAL (limited only by the application software)	AM,FM,RTTY,CW,LSB,USB, DIGITAL (limited only by the application software)	AM,FM,RTTY,CW,LSB,USB, DIGITAL (limited only by the application software)	AM,FM,RTTY,CW,LSB,USB, DIGITAL (limited only by the application software)
Modulation	Digital Low Level	Digital Low Level	Digital Low Level	Digital Low Level
Carrier & Unwanted Sideband Suppression	Greater than -90dbc	Greater than -90dbc	Greater than -90dbc	Greater than -90dbc
Harmonic Suppression	Greater than 50dB(HF) Greater than 60dB(VHF)	Greater than 50dB(HF) Greater than 60dB(VHF)	Greater than 50dB(HF) Greater than 60dB(VHF)	Greater than 50dB(HF) Greater than 60dB(VHF)
IMD3 @ 100W PEP With Adaptive Predistortion enabled	Better than -45dB on all Bands (160M - 6M)	Better than -45dB on all Bands (160M - 6M)	Better than -45dB on all Bands (160M - 6M)	Better than -45dB on all Bands (160M - 6M)

Specifications subject to change, copyright 2014 - Apache Labs Pvt Ltd.

ANAN-10E

- Similar to the ANAN 10 except:
  - 1. The ANAN-10E uses a 14 bit ADC while the ANAN-10 uses a 16 bit ADC
  - 2. The ANAN-10E uses an EP3C25 FPGA while the ANAN-10 uses a larger EP3C40
  - 3. The ANAN-10E supports 2 receivers while the ANAN-10 supports 7 receivers
  - $995.00
  - Now available for pre-order

Angelia Transceiver
Dual Coherent Receivers

- Dual Phase Synchronous LTC2208 16 Bit ADCs
- 1/2 W Ultra Linear Amplifier (250mW on 6M)
- Large 115K (EP4CE115) Cyclone IV FPGA
- Supports 7 High performance Independent Receivers on a single ADC
- Supports 2 Coherent Receivers using independent ADCs/antennas for beam forming/diversity
- FPGA has enough space to add on multiple soft core processors for standalone operation
- Onboard 128MB Flash
- Onboard 32Mbit Synchronous RAM
- $1495

ANAN 100/100D/200D Rear Panel

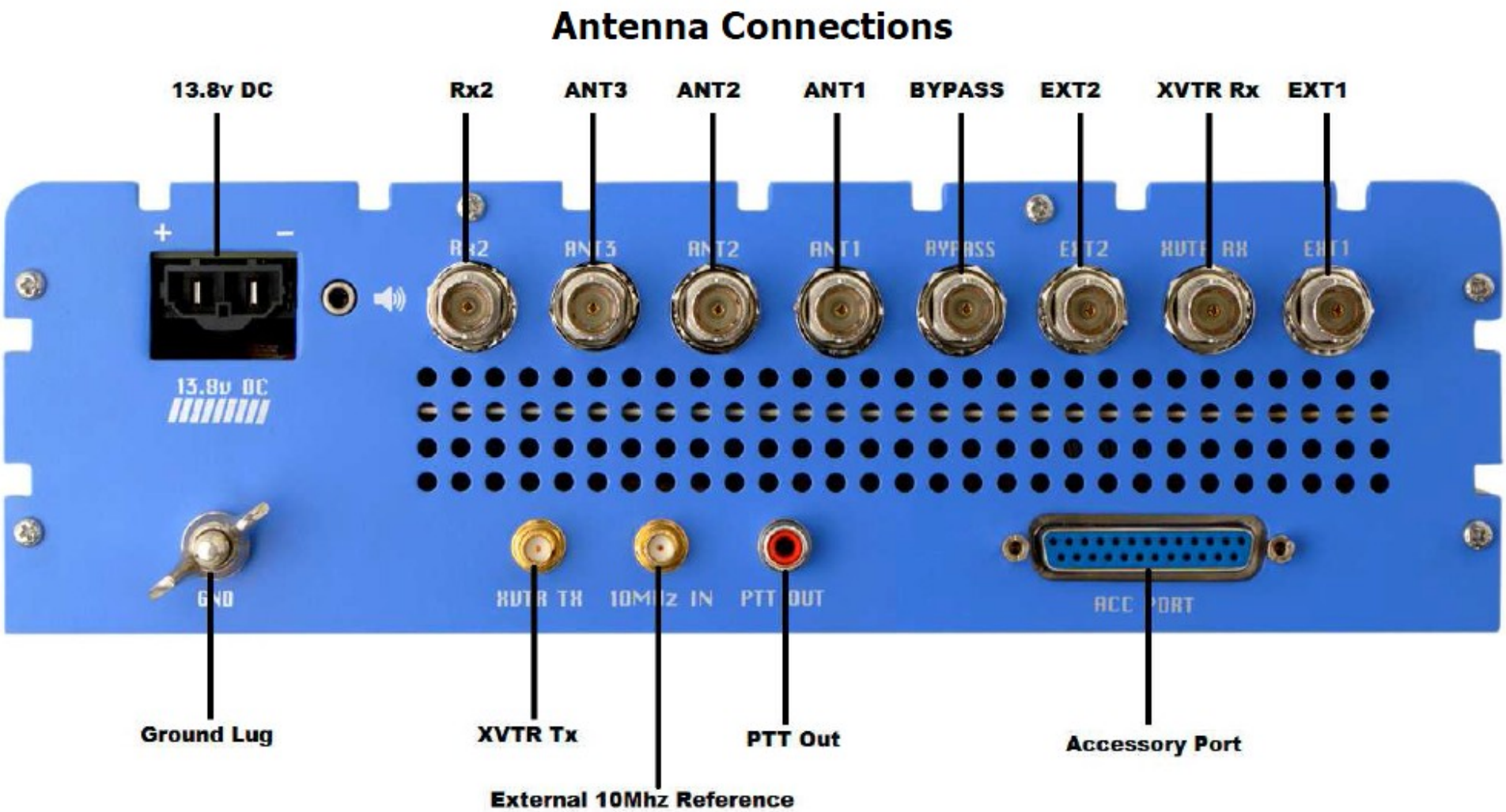

OpenHPSDR at W3SZ

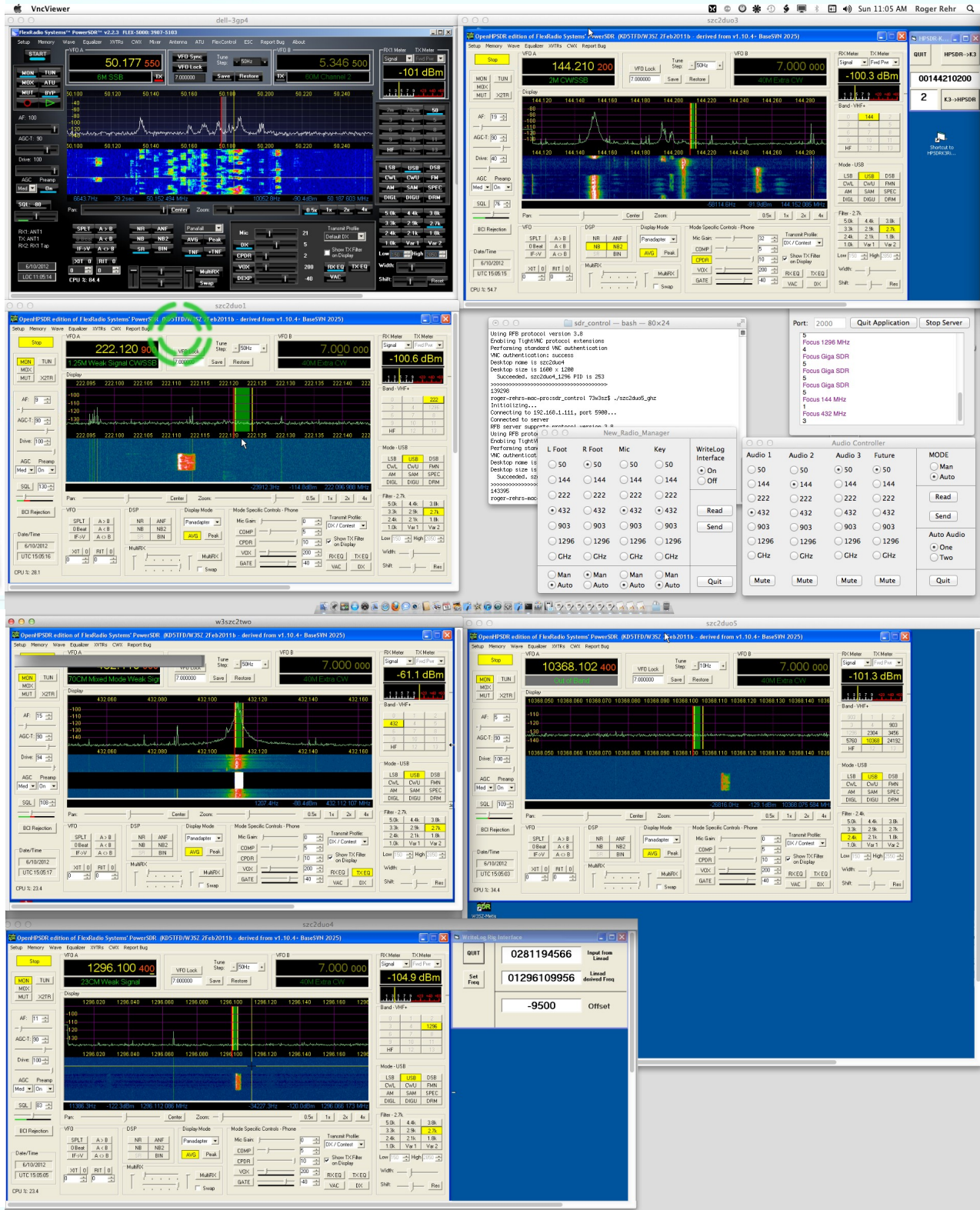
VncViewer
Sun 11:05 AM
Roger Rehr
dell-3gp4
szc2duo3
szc2duo1
sdr_control — bash — 80×24
New_Radio_Manager
Audio Controller
w3szc2two
szc2duo5
szc2duo4
WriteLog Rig Interface
0281194566
01296109956
-9500
Offset

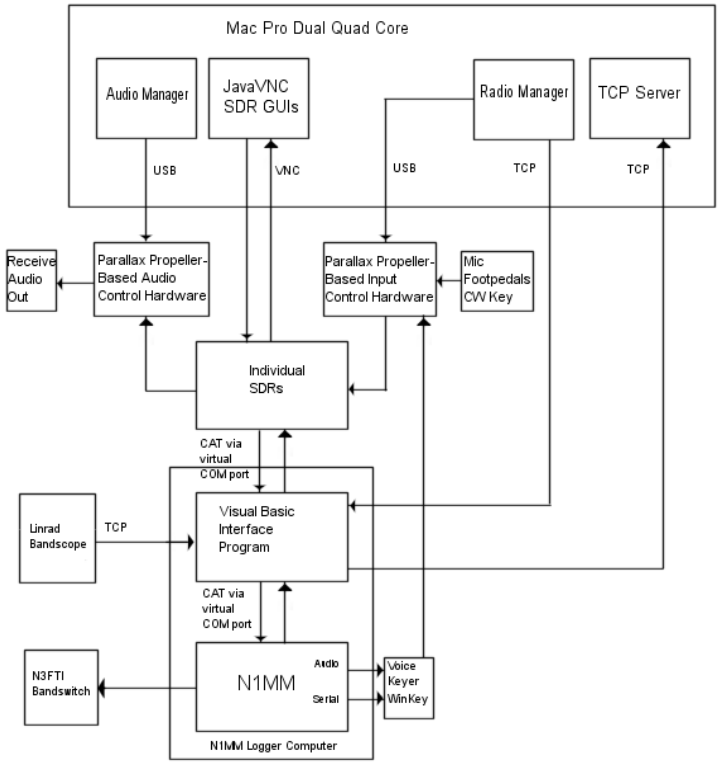
Mac Pro Dual Quad Core
Audio Manager
JavaVNC SDR GUIs
Radio Manager
TCP Server
USB
VNC
USB
TCP
TCP
Receive Audio Out
Parallax Propeller-Based Audio Control Hardware
Parallax Propeller-Based Input Control Hardware
Mic Footpedals CW Key
Individual SDRs
CAT via virtual COM port
Linrad Bandscope
TCP
Visual Basic Interface Program
CAT via virtual COM port
N3FTI Bandswitch
N1MM
Audio
Serial
Voice Keyer WinKey
N1MM Logger Computer

W3SZ SDR Controller

- First version used 6 instances of VNC – Large Ethernet bandwidth
  - Needed Dual Quadcore Mac Pro with Gigabit NIC
- Consisted of multiple homebrew software pieces on 2 computers

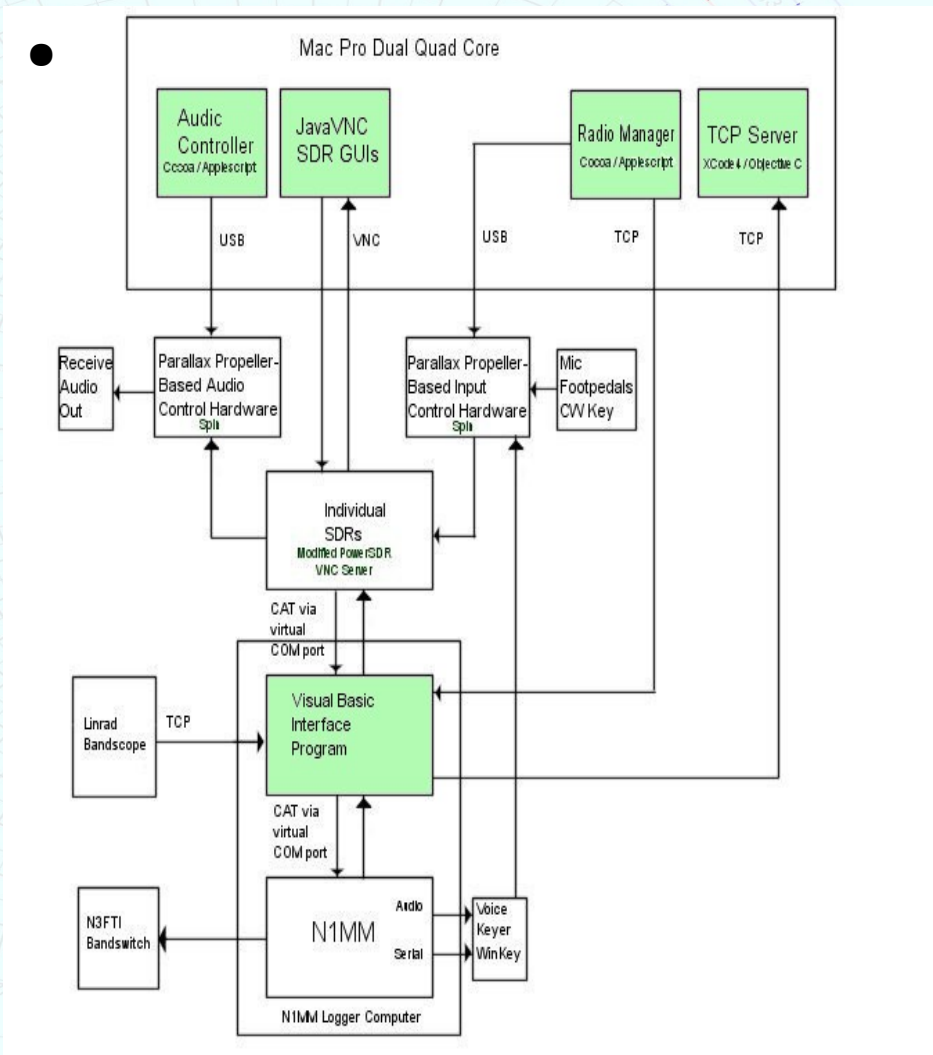

W3SZ SDR Controller

- Goals
  - Reduce Ethernet Bandwidth
  - One program on one computer
  - Maintain all features of original version

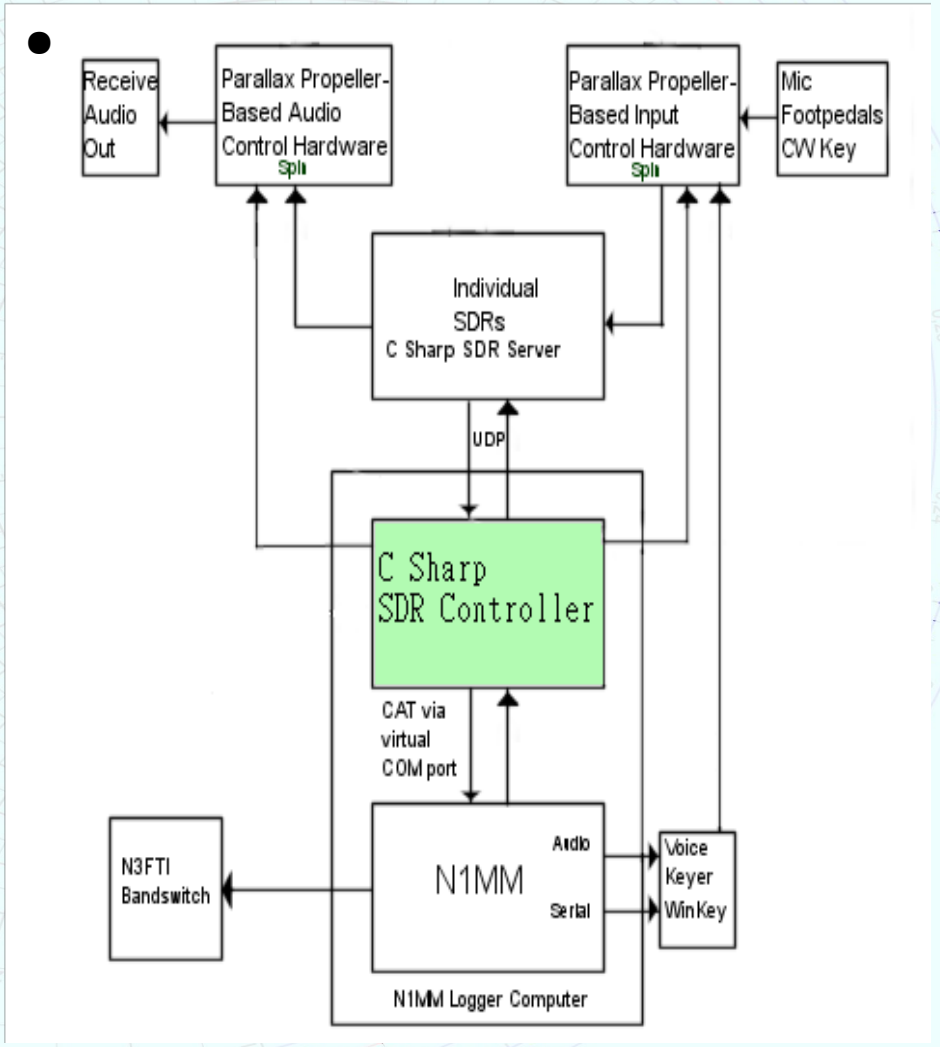

W3SZ SDR Controller

- Separate Full-time Bandscopes for
  - 50 MHz
  - 144 MHz
  - 222 MHz
  - 432 MHz
  - 903 MHz
  - 1296 MHz
  - 2,3,5,10,24 GHz
  - HF
- Full integration with N1MM Plus
- Automatic Switching of:
  - Microphone
  - CW Key / Keyer
  - 2 Footswitches
  - Receive Audio channels for 2 radios
  - 2,3,5,10,24 GHz transverters to microwave IF radio

W3SZ SDR Controller

First version used multiple instances of PowerSDR

Hardware Equivalent of PowerSDR

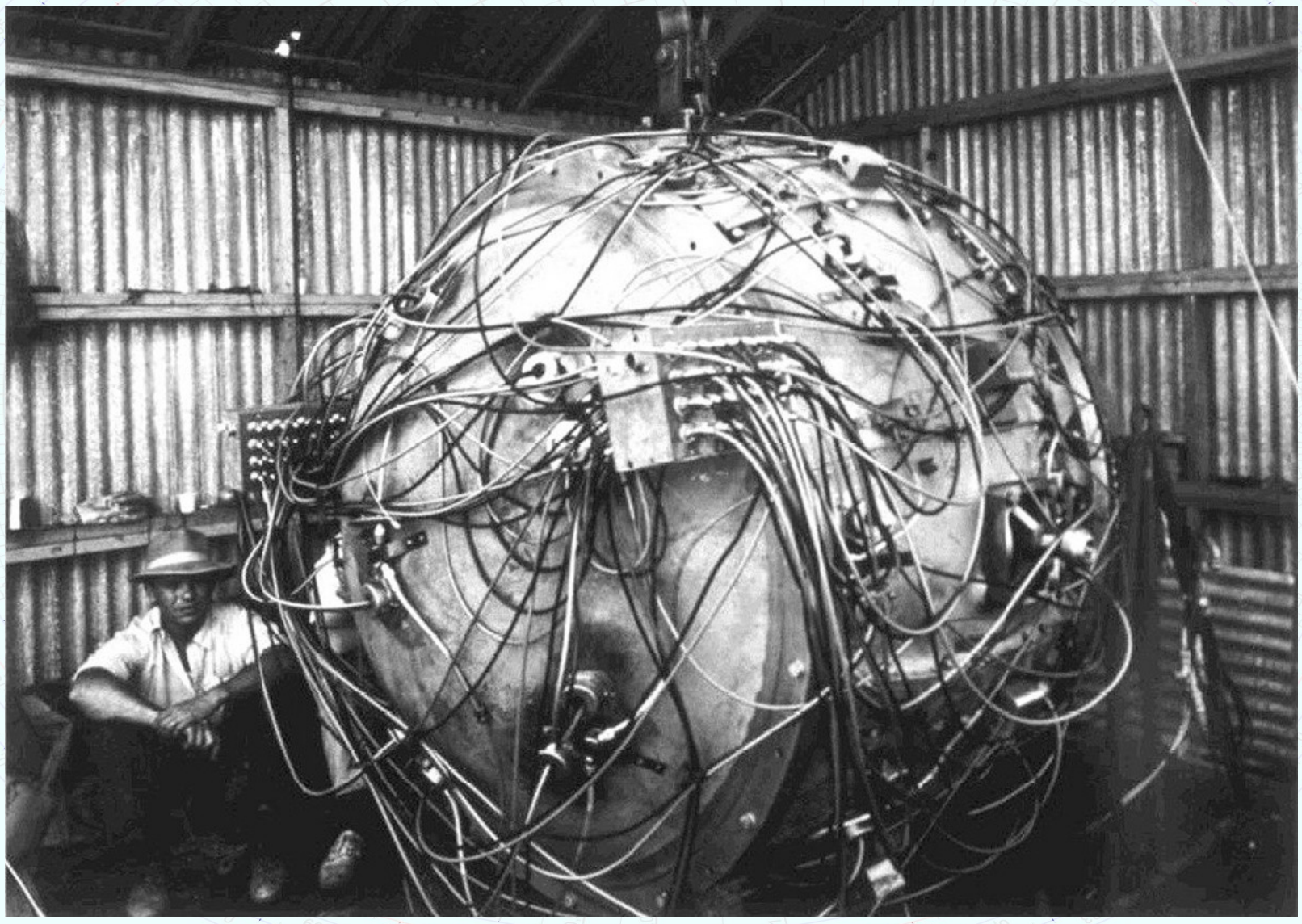

AEC-54-4984

W3SZ SDR Controller

- New version uses KISS Konsole as base
  - KISS Konsole was originally written by Phil Harman, VK6PH, “as a straightforward program that will allow beginners to get their feet wet. KK is intended as a learning experience and not as a competitor or replacement for any existing code”
  - KK is well documented
  - Like PowerSDR, KK is written in C# (C Sharp)
  - KK is much less likely to blow up when modified than is PowerSDR
  - KK was extensively reworked for this project

Modifications to KISS Konsole
-Split into Server and Client-

- Server
  - Add Adjustable FFT Size for spectrum / waterfall (4096-524288)
  - Add Wisdom FFT optimization
  - Send Spectrum/waterfall data to client
  - Receive radio commands from client
  - Add receive audio available at computer
- Client
  - Receive spectrum / waterfall data from servers, constantly display 7 bandscopes
  - Send radio commands to (7) server/radio combinations
  - Interface with N1MM Plus, appearing as Kenwood TS-2000 covering 50 MHz through 24 GHz
  - Switch CW key/keyer, microphone, 2 radio audio channels, 2 footswitches to appropriate radios

Server and Client

additional modifications common to both

- Add CW sidetone
- Add spectrum & waterfall zoom
- Add multiple waterfall palettes
- Add frequency adjustment by up/down arrows
- Add key-adjustable step size for frequency adjustment
- Add key-adjustable mode selection
  - Last 3 above so that ShuttlePro can be used to control these parameters

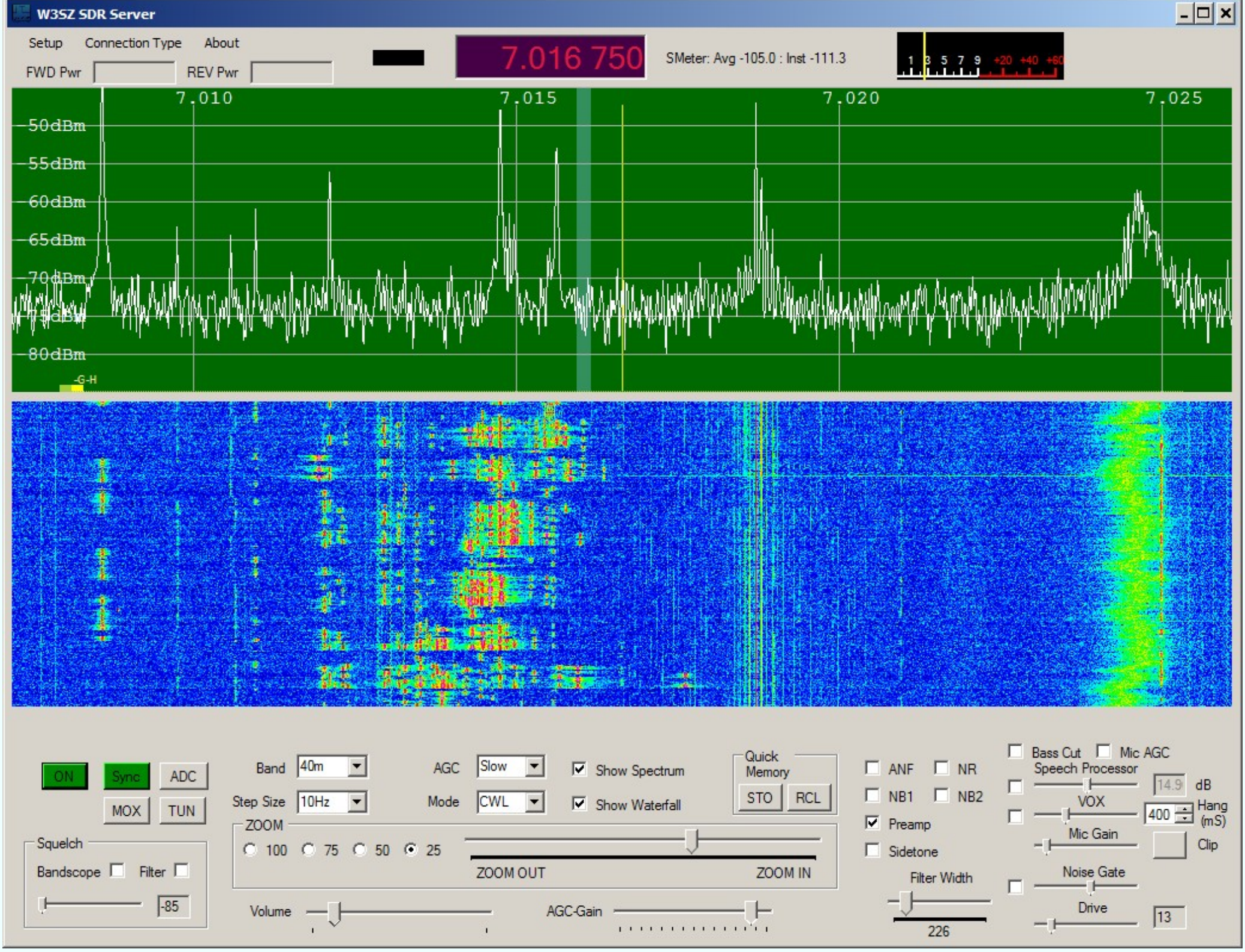
W3SZ SDR Server
Setup
Connection Type
About
FWD Pwr
REV Pwr
7.016 750
SMeter: Avg -105.0 : Inst -111.3
1 3 5 7 9 +20 +40 +60
7.010
7.015
7.020
7.025
50dBm
55dBm
60dBm
65dBm
70dBm
80dBm
-G-H
ON
Sync
ADC
MOX
TUN
Band
40m
Step Size
10Hz
AGC
Slow
Mode
CWL
Show Spectrum
Show Waterfall
Quick Memory
STO
RCL
ANF
NR
NB1
NB2
Preamp
Sidetone
Bass Cut
Mic AGC
Speech Processor
14.9
dB
VOX
400
Hang (mS)
Mic Gain
Clip
Noise Gate
Drive
13
Squelch
Bandscope
Filter
-85
ZOOM
100
75
50
25
ZOOM OUT
ZOOM IN
Filter Width
226
Volume
AGC-Gain

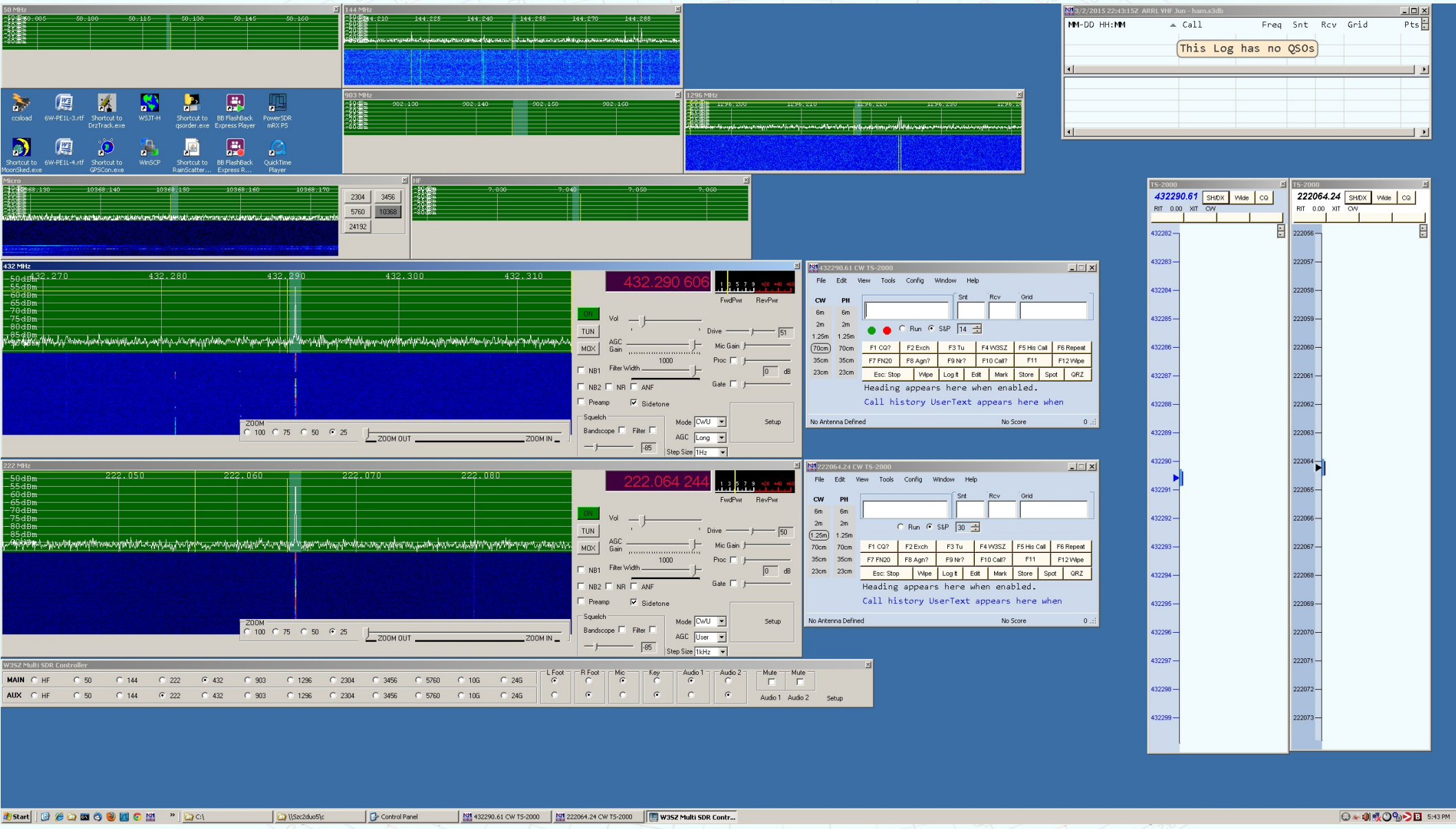
50 MHz
144 MHz
903 MHz
1296 MHz
Micro
HF
432 MHz
222 MHz
432.290 606
222.064 244
W3SZ Multi SDR Controller
This Log has no QSOs
432290.61 CW TS-2000
222064.24 CW TS-2000
Heading appears here when enabled.
Call history UserText appears here when
No Antenna Defined
No Score

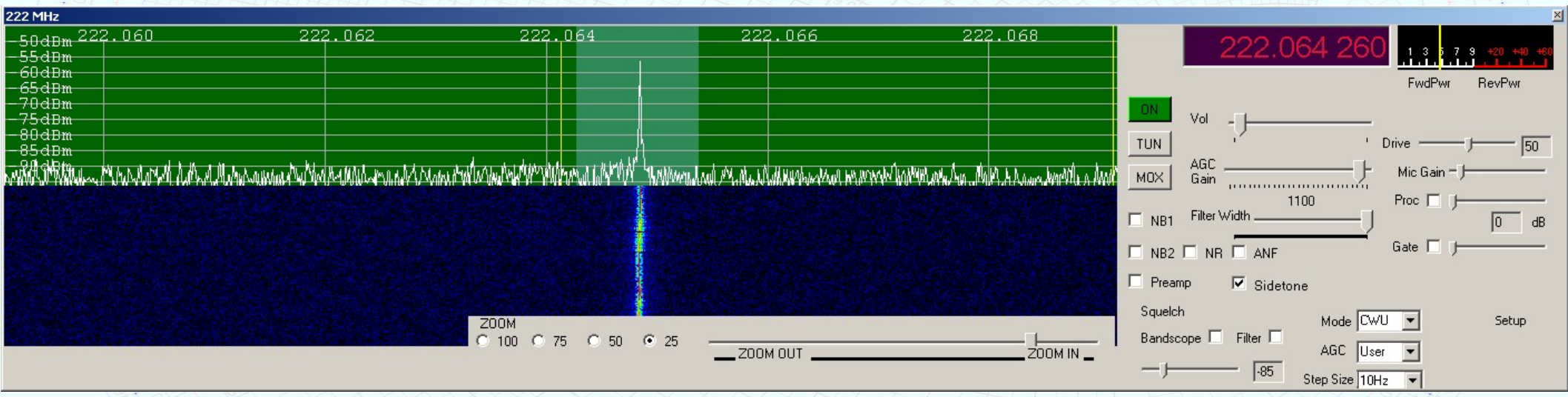
222 MHz
222.060
222.062
222.064
222.066
222.068
-50dBm
-55dBm
-60dBm
-65dBm
-70dBm
-75dBm
-80dBm
-85dBm
ZOOM
100
75
50
25
ZOOM OUT
ZOOM IN
222.064 260
FwdPwr
RevPwr
ON
TUN
MOX
Vol
AGC Gain
1100
Filter Width
Drive
50
Mic Gain
Proc
0
dB
Gate
NB1
NB2
NR
ANF
Preamp
Sidetone
Squelch
Bandscope
Filter
-85
Mode
CWU
AGC
User
Step Size
10Hz
Setup

Client

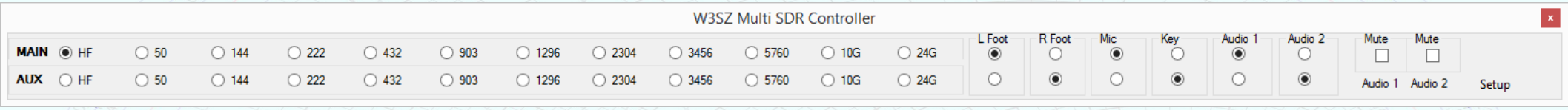
W3SZ Multi SDR Controller
MAIN HF 50 144 222 432 903 1296 2304 3456 5760 10G 24G
AUX HF 50 144 222 432 903 1296 2304 3456 5760 10G 24G
L Foot
R Foot
Mic
Key
Audio 1
Audio 2
Mute
Mute
Audio 1
Audio 2
Setup

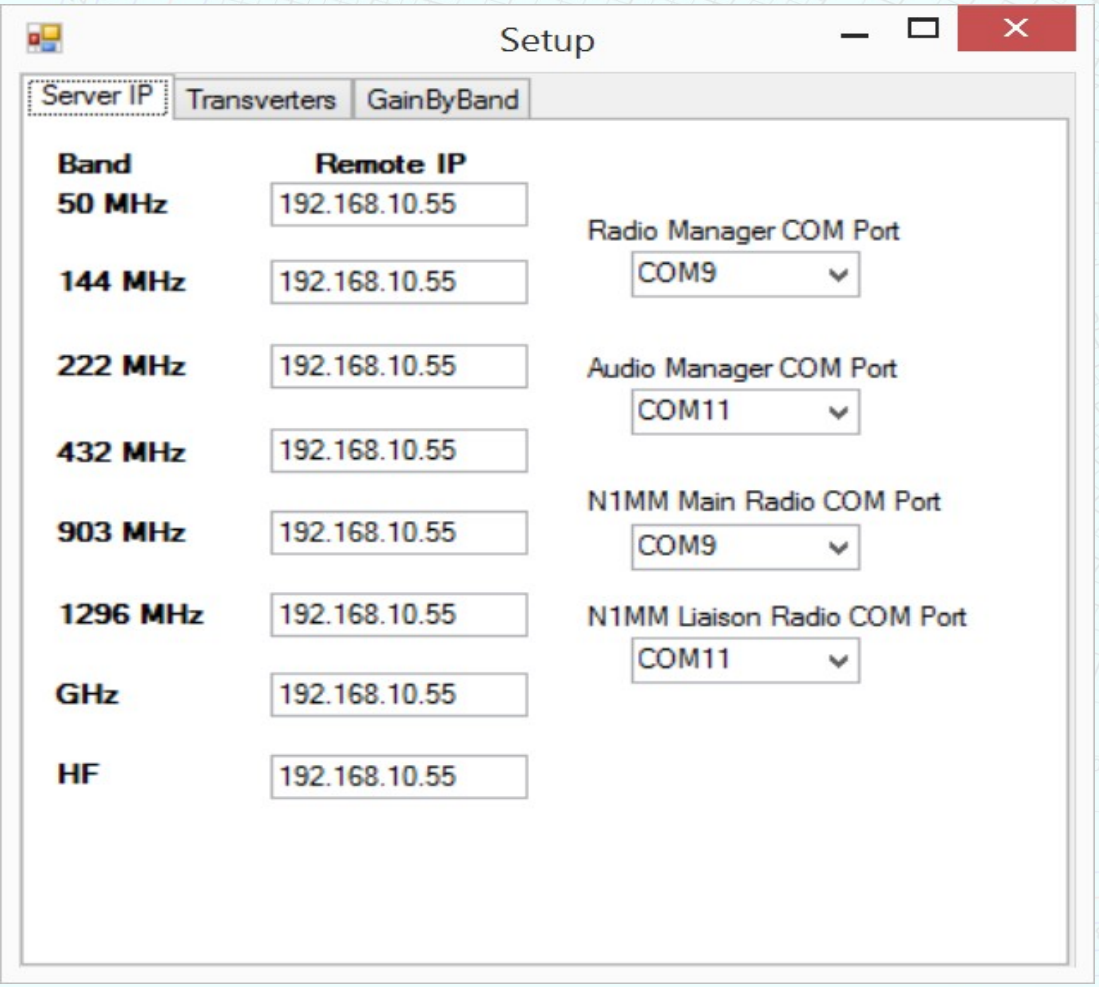
Setup
Server IP
Transverters
GainByBand
Band
Remote IP
50 MHz
192.168.10.55
144 MHz
192.168.10.55
222 MHz
192.168.10.55
432 MHz
192.168.10.55
903 MHz
192.168.10.55
1296 MHz
192.168.10.55
GHz
192.168.10.55
HF
192.168.10.55
Radio Manager COM Port
COM9
Audio Manager COM Port
COM11
N1MM Main Radio COM Port
COM9
N1MM Liaison Radio COM Port
COM11

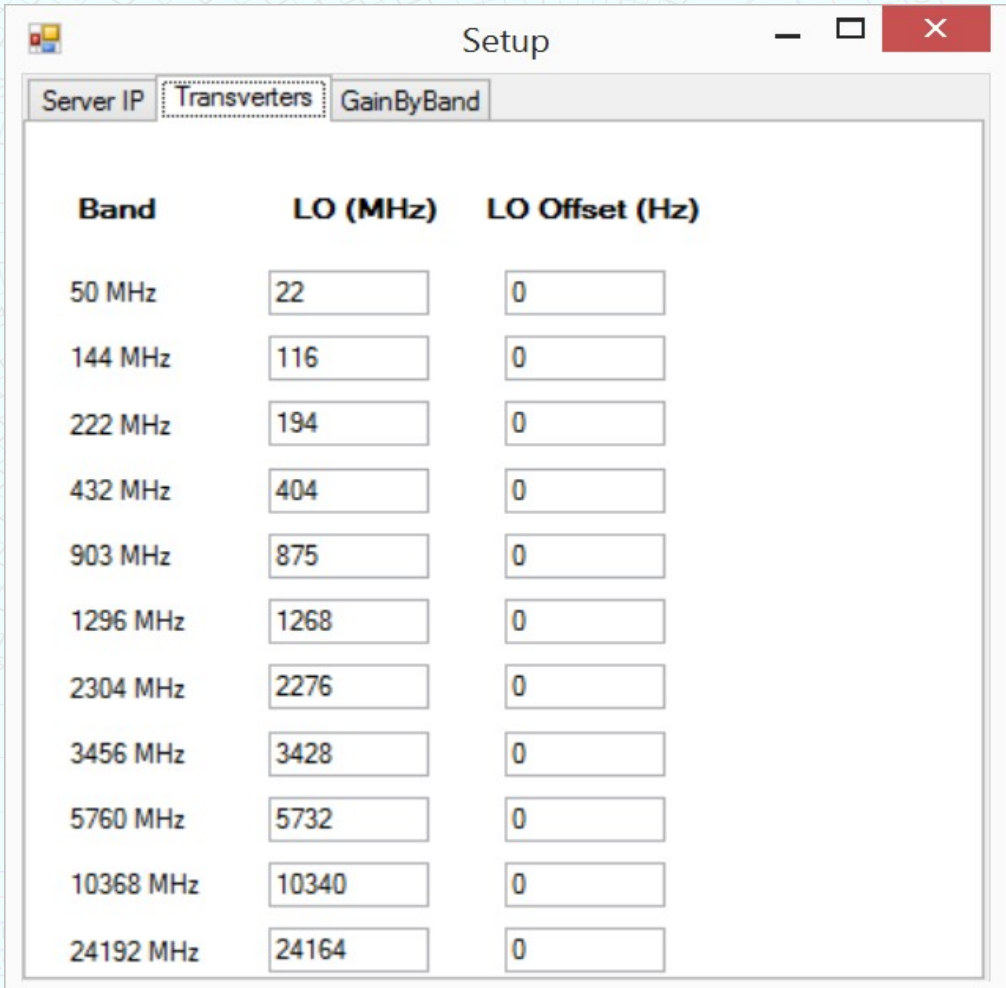
Setup
Server IP
Transverters
GainByBand
Band
LO (MHz)
LO Offset (Hz)
50 MHz 22 0
144 MHz 116 0
222 MHz 194 0
432 MHz 404 0
903 MHz 875 0
1296 MHz 1268 0
2304 MHz 2276 0
3456 MHz 3428 0
5760 MHz 5732 0
10368 MHz 10340 0
24192 MHz 24164 0

New W3SZ SDR Controller

- Runs on Core2Duo with 100 Mbps NIC
- CPU utilization 0-1% with other processes running
- Network utilization less than 0.3% of 100 Mbps bandwidth

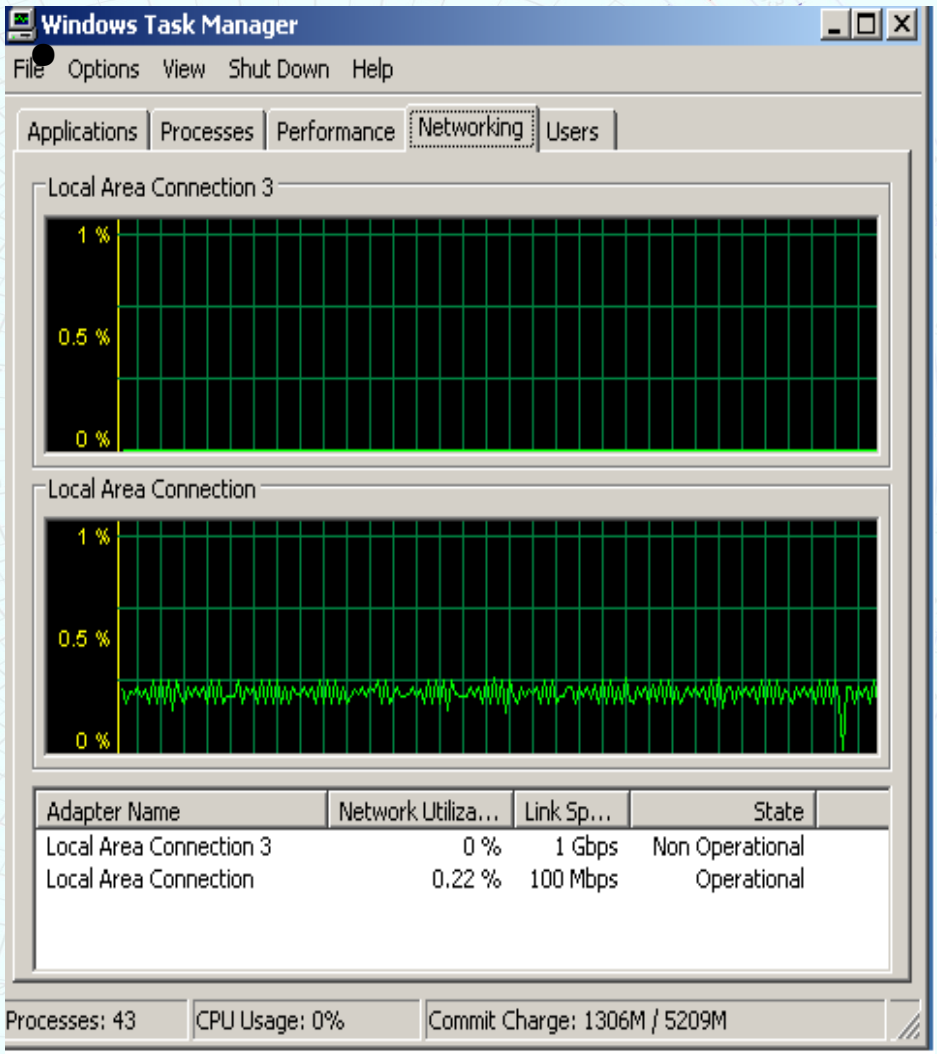

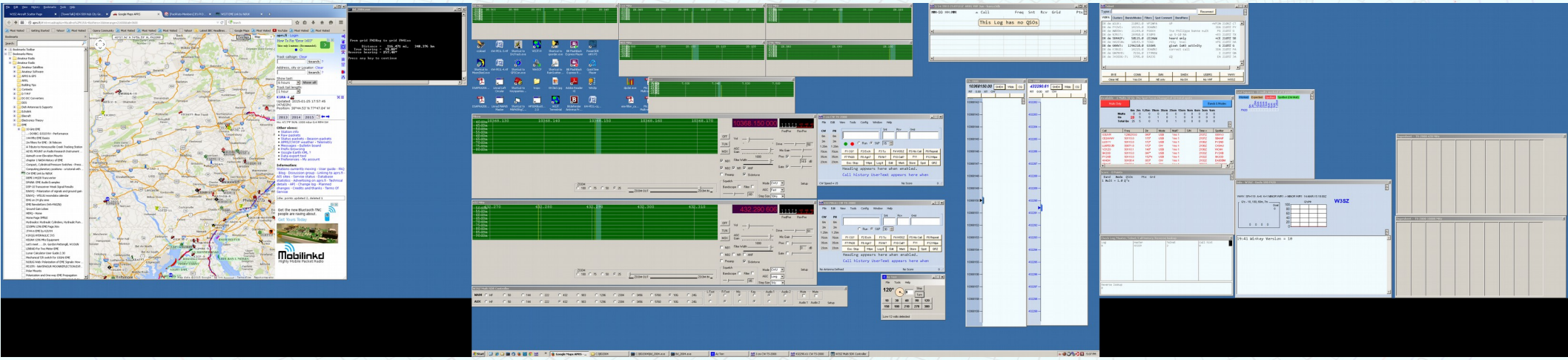
This Log has no QSOs
Mobilinkd
W3SZ

VUCC Award
VUCC Award
VUCC Award
VUCC Award
VUCC Award
VUCC Award
January VHF Contest
W3SZ
ARRL VHF/UHF CONTEST AWARD
W3SZ
First Place
ARRL VHF/UHF CONTEST AWARD
W3SZ
ARRL VHF/UHF CONTEST AWARD
W3SZ
ARRL VHF/UHF CONTEST AWARD
W3SZ
VHF QSO
W3SZ MULTI SDR CONTROLLER

Hardware SDR Controller

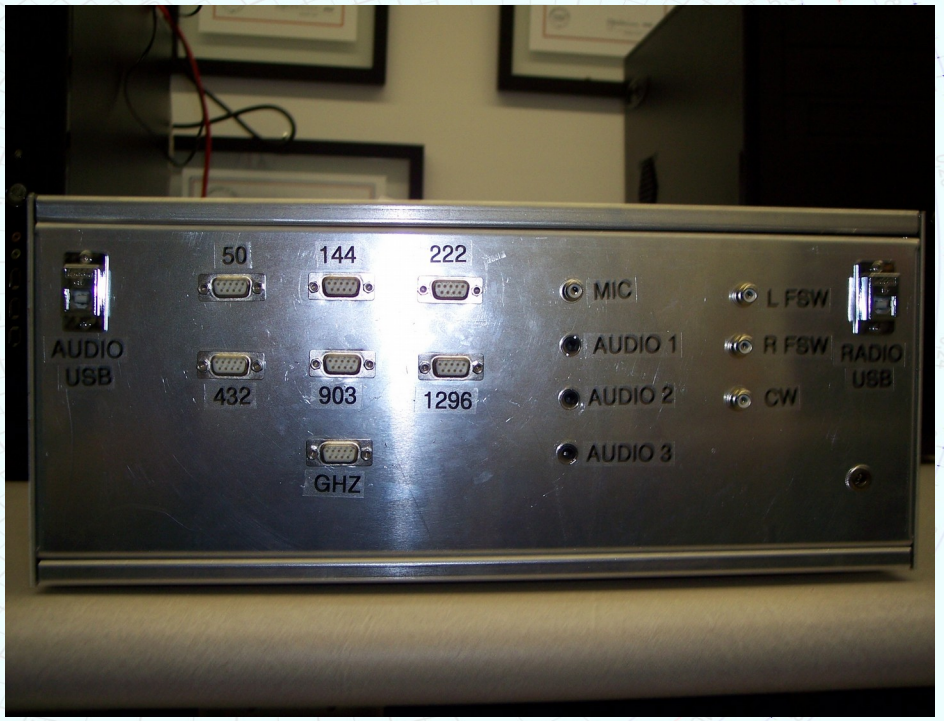

Hardware SDR Controller

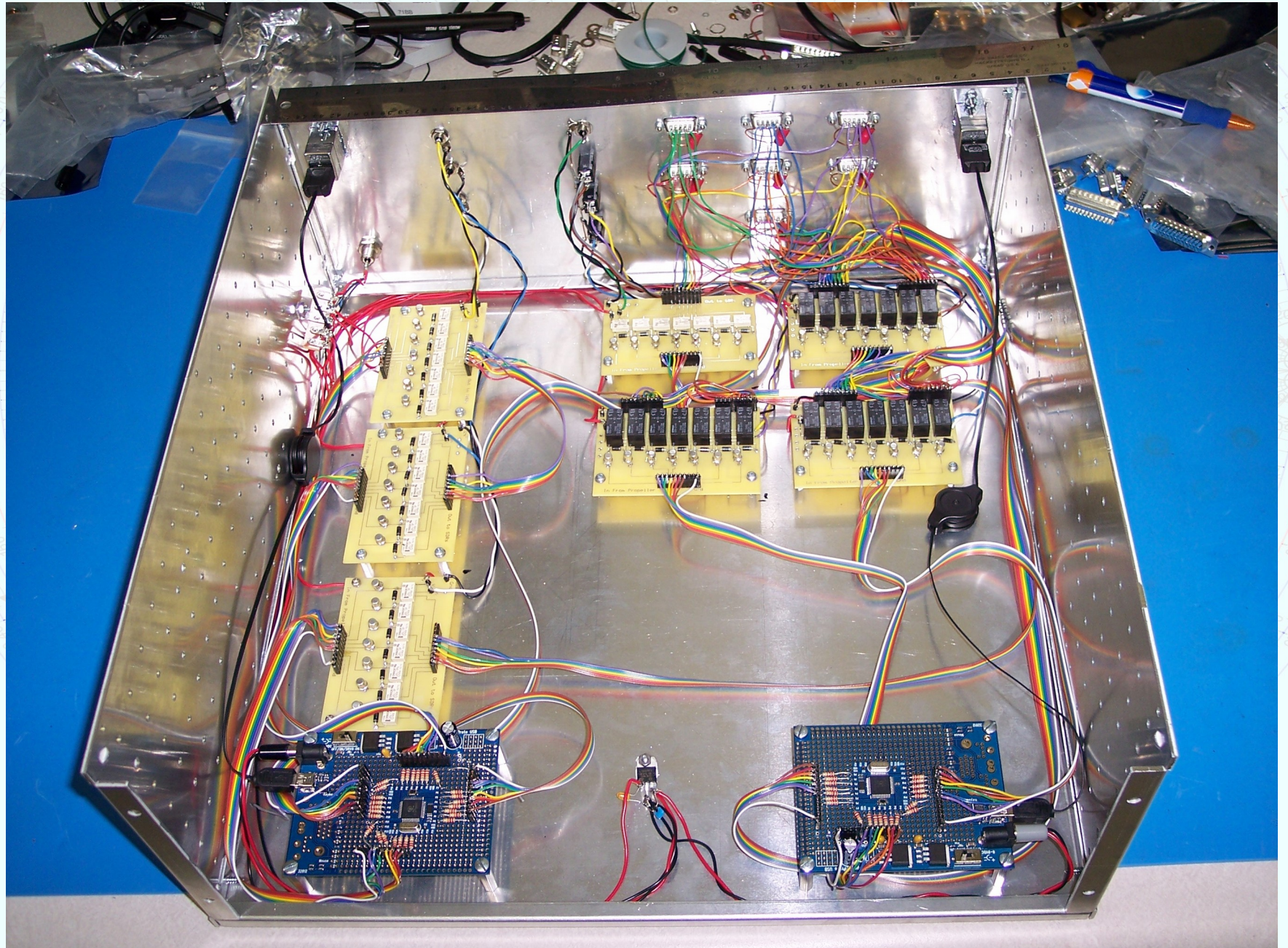

Live Demos [sort of]

Summary

- OpenHPSDR Hardware/Software provide excellent platform for experimentation, homebrewing both hardware and software
- KISS Konsole provides an excellent base for software projects tailored to individual station requirements