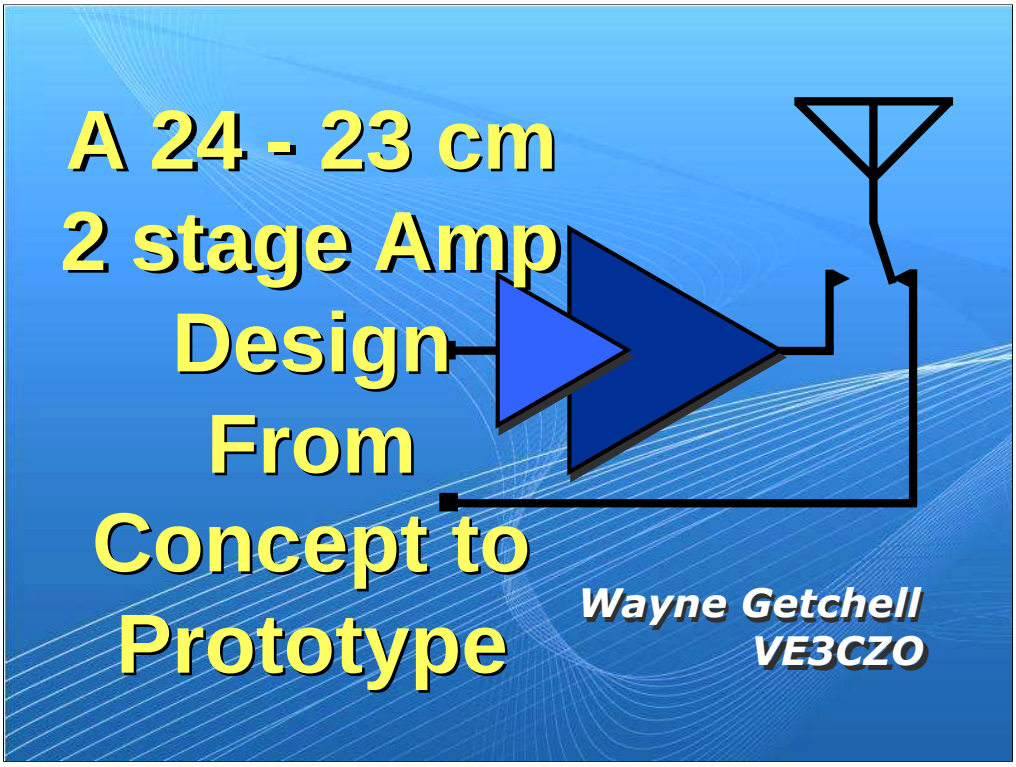

This presentation follows the development of a two stage linear RF power amplifier for the 24-23cm band (1240-1300MHz) that as an output of about 43dBm (20 Watts). It talks about the process followed to create this device starting with a set of objectives and ends with two prototype iterations along with test results.

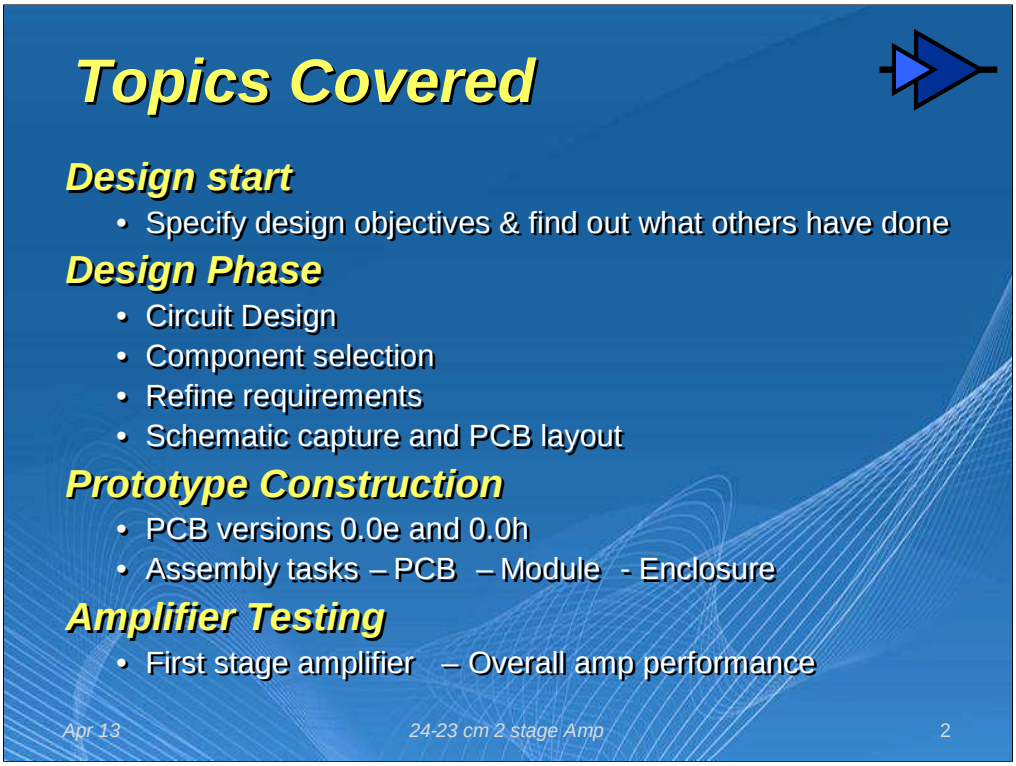

•I've started to prototype RF designs with PCB's so as often happens with initial prototypes you make mistakes, want to add features, and discover better ways to tackle design problems. So I've made two versions of this PCB 0.0e and an iteration version 0.0h. This presentation will have content from both.

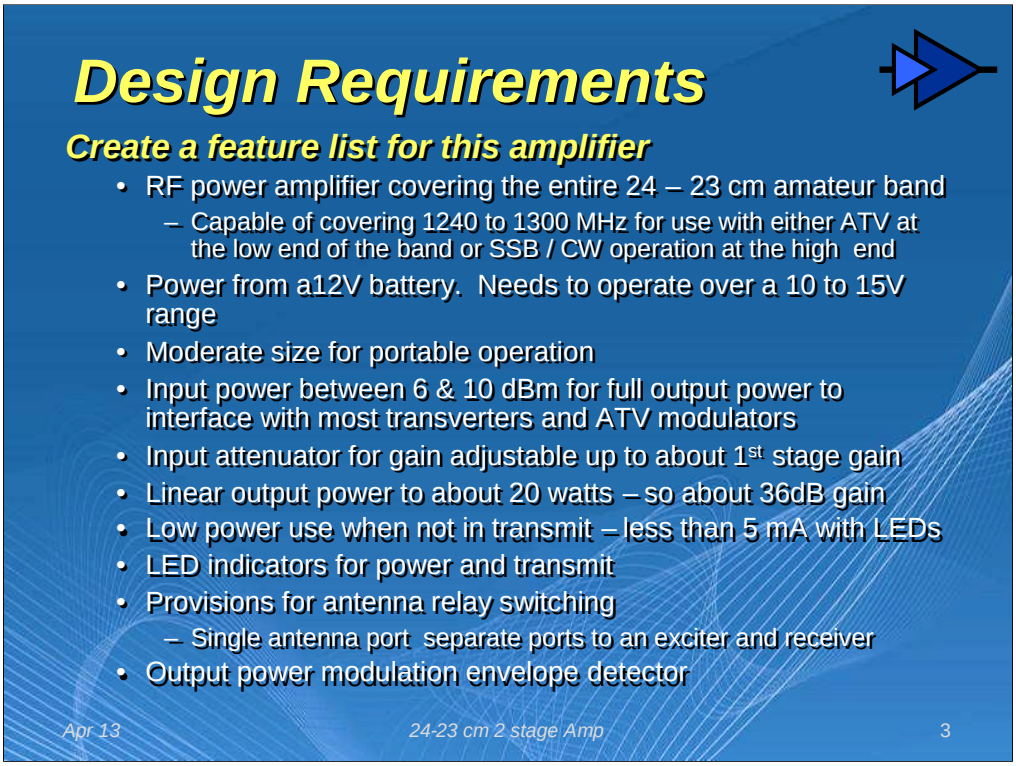

•Defining requirements is an evolving process. As you read what others have done inevitably you add or change features.

•This list was an initial starting point.

•Portable operation is important so a device that operates over a wide battery voltage range was mandatory

•A two stage amplifier would allow this amplifier to directly interface with most exciters

•Rather than use external attenuators I thought that an input attenuator would enable an easier connection to a wide range of exciters

•At around 20 watts out you won't do EME with this unit but as it's linear and the gain is settable.. It has enough power to get a reasonable signal out but not so much that you need a huge battery for a day's outing. It would also make a good driver for a high power amp

•It was also important that the amplifier use minimal current when not transmitting so that it could be left on in standby all day and not impact battery life.

•The output power modulation envelope detector was added for use with my Sequencer1 design. It's pretty conventional and I don't try to use it as a power sensor, simply as a modulation detector.

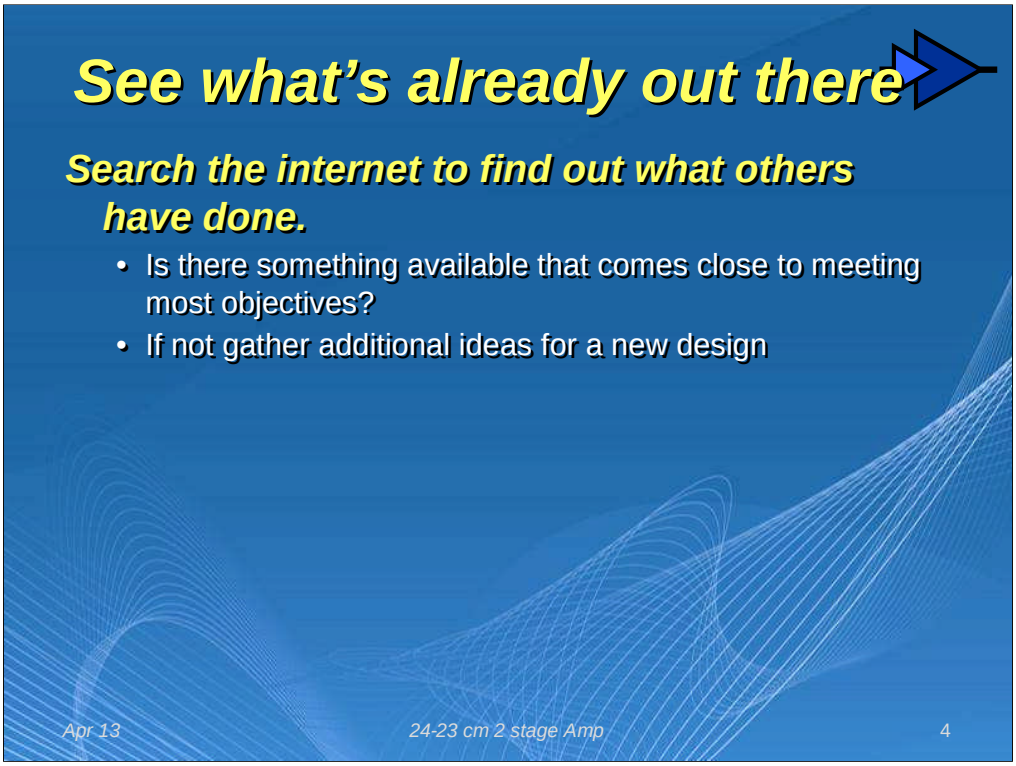

•The internet is such a great resource. I spend almost too much time searching out what others have done formulating ideas for a design.

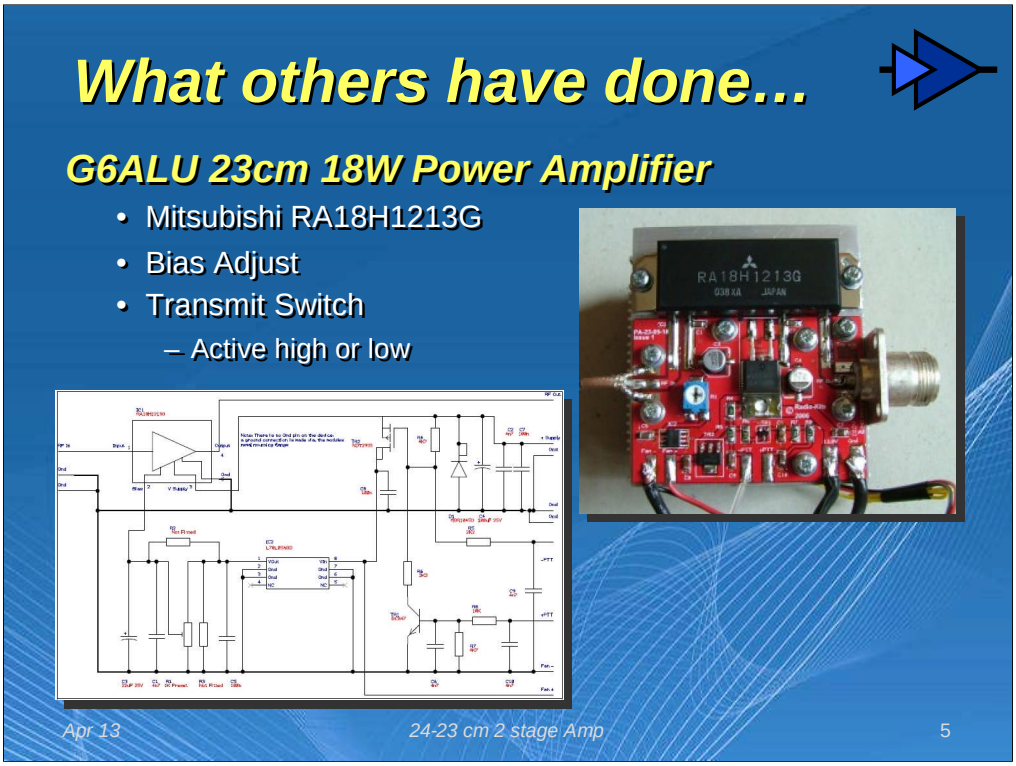

•This design provides a PTT input that can be used either active high or low

•Bias is derived from 5V regulator through a POT.

•The regulator and therefore bias is switched when PTT is inactive reducing overall current.

•Module through gain with zero bias according to the data sheet is reduced by about 60dB.

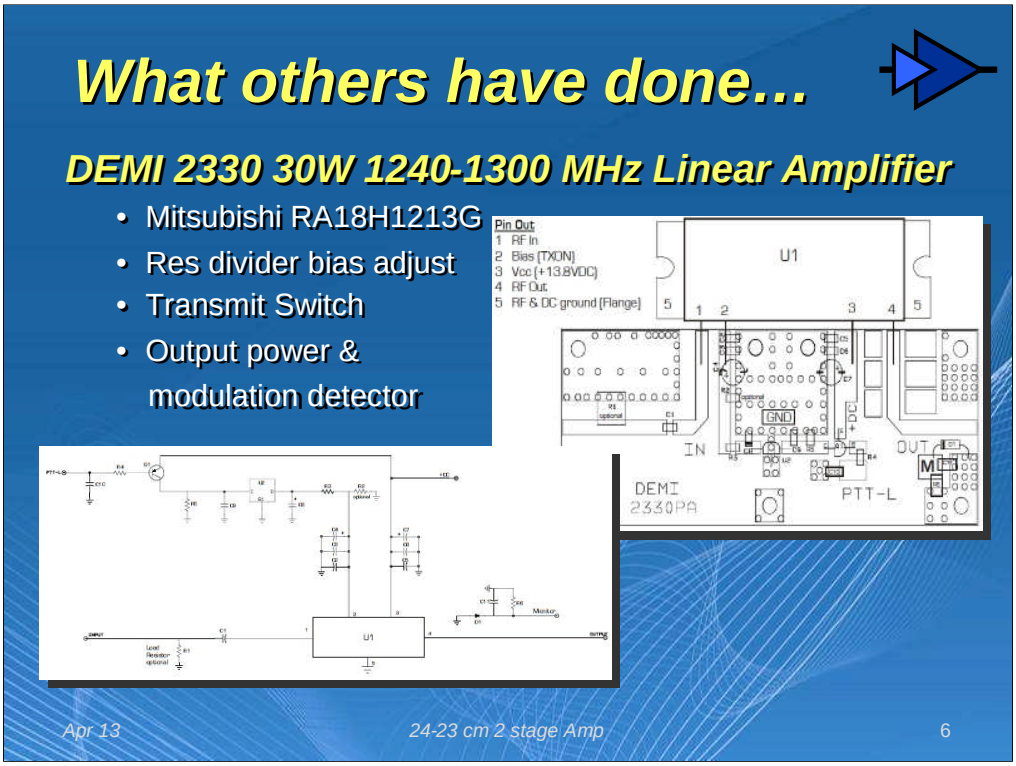

•DEMI does active low PTT only and uses a 5V regulator and resistor divider to set the module bias.

•The design also features a power detector inductively coupled to the output line.

•The output line is straddled by ungrounded PCB pieces. Perhaps used for flaking the output

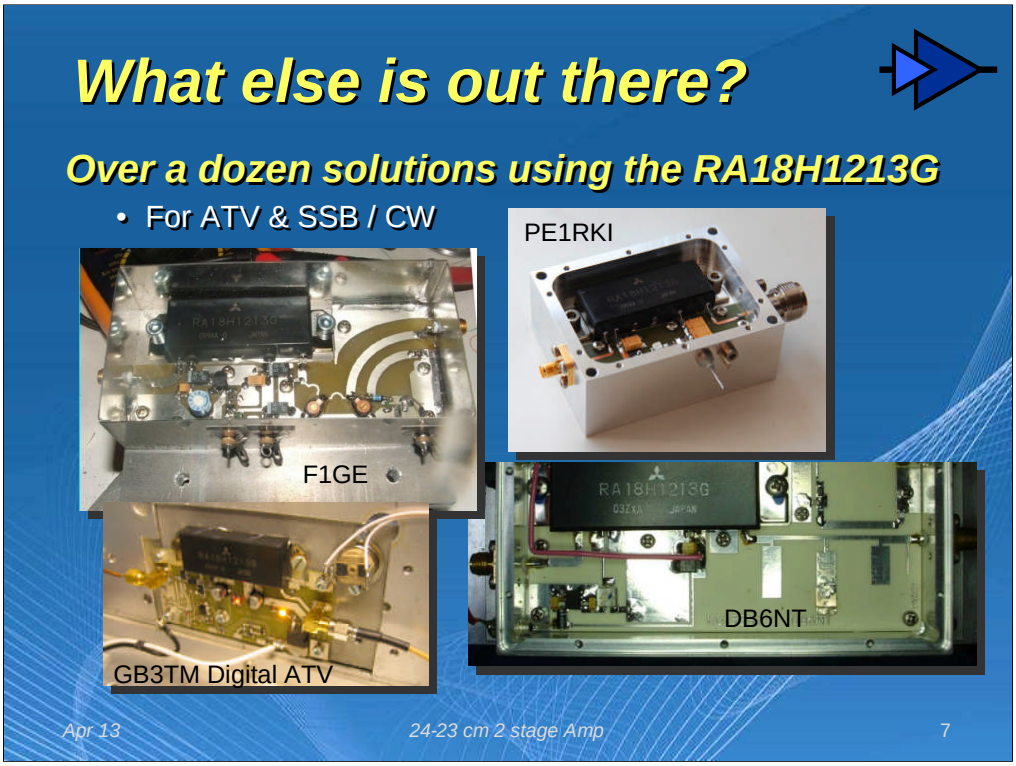

•F1GE provides tuning for the output.

•Several designs allow for tuning of both the input and output

•DB6NT also allows for some output tuning

Data Sheet Info

ELECTROSTATIC SENSITIVE DEVICE
OBSERVE HANDLING PRECAUTIONS

MITSUBISHI RF MOSFET MODULE

RA18H1213G

1.24-1.30GHz 18W 12.5V, 3 stage amplifier for MOBILE RADIO

Key Info

- Covers 1.24 to 1.3GHz
- 18 Watts output
- VDD 12 to 17 Volts
- Adjustable bias for gain linearity
- Gain ~ 25dB peaks at 33dB @1270
- I/P 20 - 23dBm for full O/P pwr
- Efficiency 25 - 30%

FEATURES

- Enhancement-Mode MOSFET Transistors (I_{DD}≅0 @ V_{DD}=12.5V, V_{GG}=0V)
- P_{out}>18W, η_T>20% @ V_{DD}=12.5V, V_{GG}=5V, P_{in}=200mW
- Broadband Frequency Range: 1.24-1.30GHz
- Low-Power Control Current I_{GG}=1mA (typ) at V_{GG}=5V
- Module Size: 66 x 21 x 9.88 mm
- Linear operation is possible by setting the quiescent drain current with the gate voltage and controlling the output power with the input power

BLOCK DIAGRAM

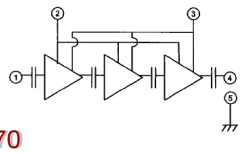

1. RF Input (P_{in})
2. Gate Voltage (V_{GG}), Power Control
3. Drain Voltage (V_{DD}), Battery
4. RF Output (P_{out})
5. RF Ground (Case)

•This is a 3 stage module with key parameters listed in the slide.

•This module seems to be the amplifier of choice for most of the designs I've come across in the internet.

•It seems to be a reasonable low complexity choice to get from low to moderate power at this frequency band.

•A lot of people have had experience with the device so why not try it out.

RA18H1213G Module

Additional info from datasheet & web articles

- Robust output at 18 W tolerates 20:1 VSWR
- Most data sheet testing is done @ Pin = 23dBm and Vgg of 5V.
- Maximum input power 300mW or 24.8 dBm is quite close to the 23 dBm used in the datasheet for most specs
- Gain changes over frequency in 'linear' RF output range can be a challenge
  - 33dB at 1270 versus 25dB at 1240 and 1300.
- Vgg must not exceed 6 V or the module will be damaged
- Stability has been a problem for a number of users
  - The heatsink flange is the only ground so you can't put insulating heatsink compound under the screw portion of the mounting flange
- This also makes thermal management at the high RF output powers a challenge. Power dissipation can exceed 80Watts! For portable use a 'smallish' heatsink with a fan will be a must…so fan control is added to the requirements

•There is a very narrow margin between the input power used by the module for most datasheet specs, 23dBm, and the maximum input power, 24.8dBm. This 1.8dB margin will pose a significant problem driving the amplifier to it's maximum without exceeding the absolute maximum input power.

•Vgg must be limited to 6V or the module will be damaged by high bias currents. These modules are too expensive to disregard this parameter!

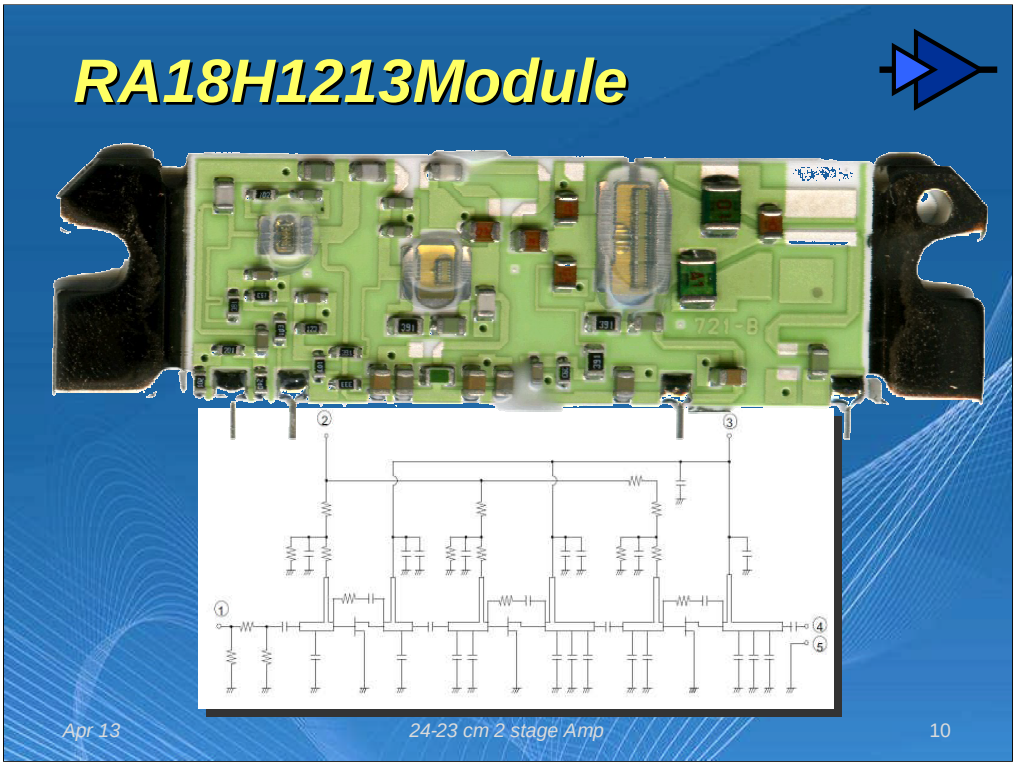

This picture sows the module with the cover removed. It's a 3 stage MOSFET amplifier biased class AB

- The transistors are covered in a protective coating.
- The input consists of a resistive pad and a transmission line feed to the first stage amplifier.
- The spec sheet indicates a maximum input power of 300mW. I wouldn't want to put a whole lot more through the input pad resistors!
- Note that there is space for an output capacitor to ground on the module

1st Stage Amp Design

The RA18H1213G module doesn't have enough gain for full output with less than about 20 dBm I/P even at high bias currents so an additional amplification stage will be nice

Target characteristics

- P1dB > 23dBm (200mW) – the input power used for most of the datasheet specs
- Shouldn't be able to blow up the module input so output should saturate at less than 25dBm
- Maximum gain should be about 17dBm for 23dBm output. With a 6dBm input a gain of 13 to 15 would be just about right
- From factor SOT89 – package capable of moderate power dissipation

Started with SGA 7489

- Spec…gain 20 dB & P1dB 19dBm – gain quite high, P1 a bit low…
  ….but I have some on hand so will start with this one

Try SXA 389BZ …these needed to be ordered… eBay again!

- P1dB 25dBm gain about 15dB
- Vdd = 6V max 115mA typical bias current
- Opt for passive resistor biasing so output power can be limited while maintaining linearity hopefully up to around 23dBm.

•There are quite a number of SOT89 gain blocks around but few have high P1dB, lower gain, and reasonable supply current.

Version 0.0e Circuit Design

Voltage Range

- 10 to 15V - covers most battery chemistries. 13.8V nominal

PTT Switch

- Active low PTT function that uses little current
- Controls bias to 1st stage amp PA & other ccktry for low standby current

Switched Supply

- Output on when PTT low for auxiliary uses primarily for a coax relay

Internal regulated voltage

- 1117adj LDO regulator in SOT223 heat tab for good thermal mgmt
  - Vout set to 9.0V for good regulation with minimum 10V supply.
  - 1st stage RF gain block allows for passive resistor biasing
  - Provides bias for RA18H module & fan thermostat IC
- Note that 9V can destroy the RA18H Vgg input so this voltage must be limited before it gets to the module!

Thermostat

- Found an LM56 to provide a temperature controlled switch with hysteresis for the fan.

•Here's a list of design objectives for the first prototype

Version 0.0h Circuit Design

This iteration adds

Switched Supply timing

- Delays insure a coax relay driven from the switched supply can't be hot switched if the amplifier is used without a controller

Over Temperature Shutdown via the Thermostat

- The second LM56 output is used to sense over temperature
  - Shuts down power amplifier RF output by driving VBIAS to ground
  - Drives LED Over Temperature indicator

•These features were added to the iterated design

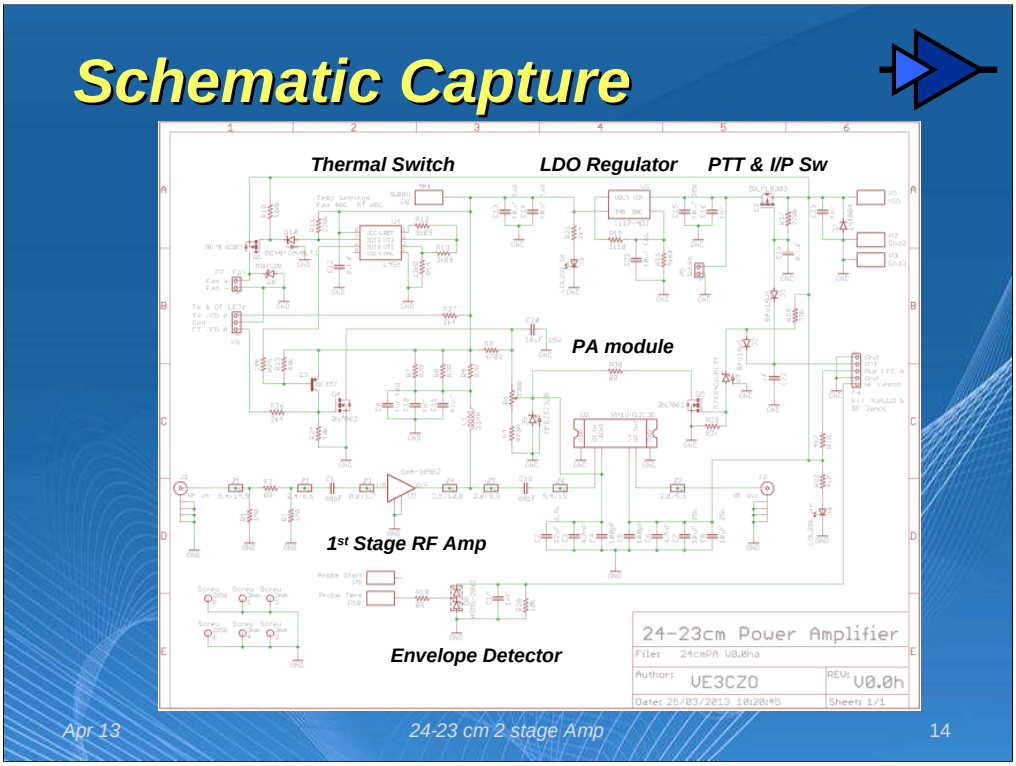

•Eagle is used for schematic capture and PCB layout

•A circuit description is included as part of the overall documentation package and has more detail than the overview in this presentation.

PTT Switch

- PTT input is active low and is driven by a low current open collector or drain device
- PTT input drive required is less than 1mA
- Q2 supply switch is a 30V 2.3A Pch with 150 mOhm Ron in SOT23 pack. It supplies the SwSupply port, & internal voltage regulator

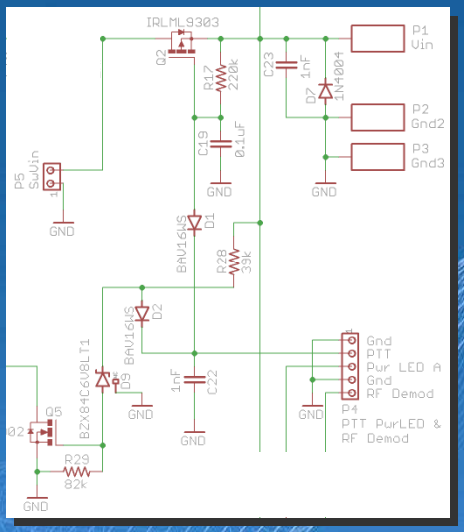

•The PTT port is designed to be driven by an open collector or drain device. It needs to be capable of driving the PTT line to within a volt of ground and it will need to sink about half a milliamp to do that. When off it needs to withstand the input voltage supplied to the amplifier.

•The two PTT branches, D1 and D2 also provide timing for the SwVin supply. That supply is switched on to Vin during transmit and can be use for just about anything as its capable of driving over two Amps into a load but it was intended to drive a coax Tx / Rx relay coil. Timing for the drive is designed so that the relay can't hot switch if it's used without a controller. Details about how this function works is provided in the circuit description document. Briefly C19 & R17 along with D9 and Q5 provide timing control. The timing is described in more detail in the characterization section of this presentation.

Voltage Regulator

- 1117- ADJ LDO regulator in SOT 223 power pack set for 9.0V
- Supplies 1st stage amplifier, PA VBIAS & LM56 thermostat
- LDO input supply voltage is switched by PTT

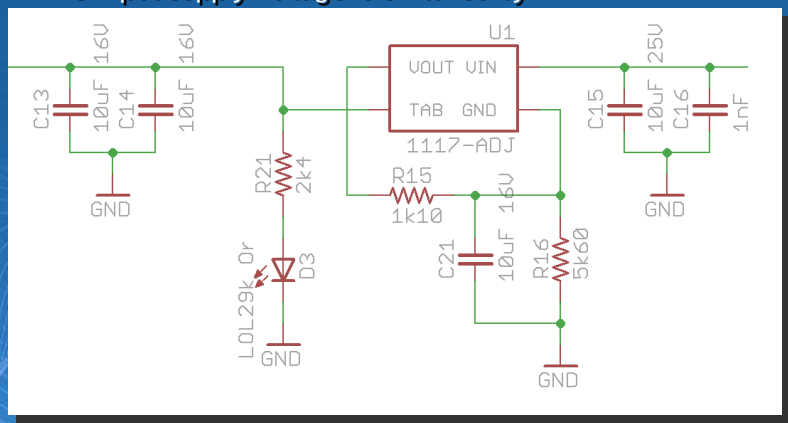

•The 117Adj output capacitor is two 10UF caps in parallel as they're less expensive than a single 22uF cap

•C21 reduces ripple noise on the output.

•The on board LED D3 is optional but I like including it at least during debug as it's a friendly reminder that the unit is in Tx mode as you're poking about. And the additional two and a half milliamps is incidental compared to the module bias current!

•Not all 1117Adj regulators are alike. Especially watch the maximum input voltage. Most are rated for 16V or LESS. The National / TI's device is the only exception I've come across. It's rated for use up to 20V.

LM56 Thermal Switch

- Dual temp sense fan then over temp
- Calculator input trip points & R1 - R3

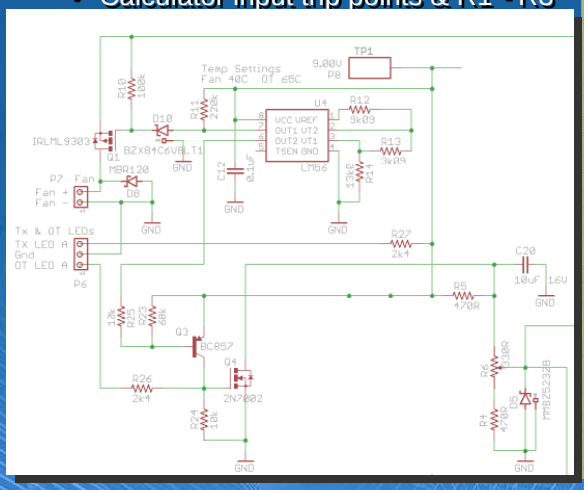

1	*LM56 Calculator Dual Temperature Set*			
2	*VT1 must be lower than VT2*			
3	*R1-Gnd to Vt1 R2-Vt1 to Vt2 R3-Vt2 to Vref*			
4	Target Vt1 trip temperature	35	degC	
5	Target Vt2 trip temperature	60	degC	
6	Temp sensitivity	0.0062	V/degC	
7	Vref voltage	1.25	Volts	
8	Vref Load Current Spec'd	5.00E-05	Amps	
9	Vtemp Int Ref @ Vt1	6.12E-01	Volts	
10	Vtemp Int Ref @ Vt2	7.67E-01	Volts	Max
11	Bias Current	1.50E-07	Amps	3.00E-07
12	max Ib temp error	0.3	deg/C	
13				
14	*Estimated Values*			
15	Rtotal	25000	Ohms	
16	R1	12240	Ohms	
17	R2	3100	Ohms	
18	R3	9660	Ohms	
19				
20	*Values Selected*			
21	R1 chosen	12400	Ohms	Vt1 to Gnd
22	R2 chosen	3090	Ohms	Vt1 to Vt2
23	R3 chosen	9760	Ohms	Vt2 to Vref
24				
25	Iref through R1 R2 & R3	4.95E-05	Amps	
26	Vt1	6.10E-01	Volts	
27	VT2	7.63E-01	Volts	
28				
29	*Trip Temp with Values Selected*			
30	Trip Temp Vt1	35	deg/C	
31	Trip Temp Vt2	59	deg/C	

•I get a kick out of creating helper spreadsheets to calculate component values that I may want to change. This is an instance as I have moved the fan threshold from 30 to 40 deg C and visited settings in between before settling on 40C. You may see a need for something different. The spread sheet makes altering the thresholds easy. Simply enter the target threshold temperatures in the shaded cells. Look at the 'Estimated Values' for R1 to R3 and choose 1% resistor values as close to the estimated values as possible. Enter these into the shaded sells in the 'Values Selected' section. The spreadsheet then calculates the trip temperatures based on the values selected.

•When the fan threshold is exceeded Q1 an open drain device capable of delivering more than an amp of current turns on an external fan connected to P7.

•I've found both fans used stalled at high RF output powers and needed a small ferrite bead around the leads to choke off RF.

•When the Over Temperature OUOT2 triggers Q4 turns on and subsequently shuts down the RA18H1213G VBIAS pin effectively shutting down the RF output and removing the I_{DD} current.

•There is about a 5 degree hysteresis built into the LM56. If the unit is inverted (fan down) the fan may come on but never shut off as there is insufficient air flow around the heatsink. If you find this is the case invert the unit so that the fan is on top.

•R27 controls the current to an external LED, anode to P6 pin 3 cathode to ground. For interfacing to a controller I have a switched output on the relay boost converter used with the SMA relay in the project. If you wanted an output that indicated the unit is in the Tx state for an external sequencer the switched 9V supply that R27 is connected to is just about ideal. You could use this voltage by reducing R27 to say 300 ohms, so that the voltage at P6 pin 3 is closer to the switched 9V buss, and use an external resistor in series with the LED to limit current. If you need 5V out

PA Module Section

- Thorough bypassing required
- Bias Set via R6
- D5 protects Bias input

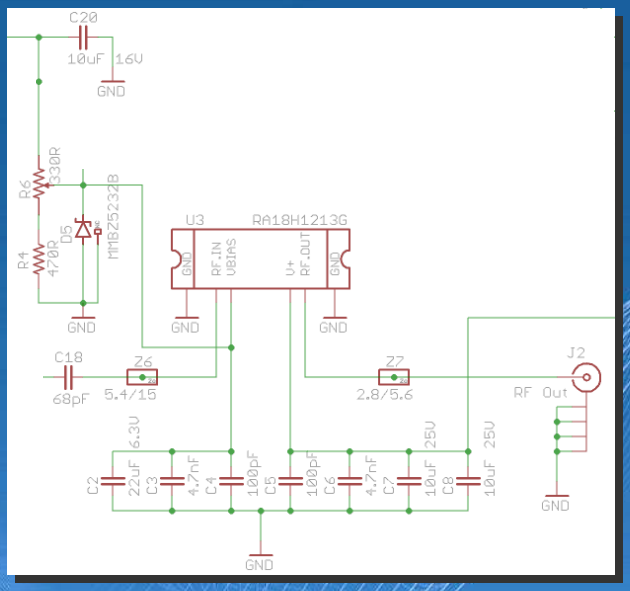

•D5 a 5.2V zener protects the VBIAS pin from exceeding its six volt limit.

•Two 10uF caps are used on the Vcc line as they're less expensive than a single 22uF 25V cap.

•Thorough bypassing is a must for this module. Make sure that the 100pf caps are good at 1.3GHz!

1st Stage RF Gain schematic

- TL segments are back annotated into the schematic after layout. They show the section length in mm & deg at 1270 MHz

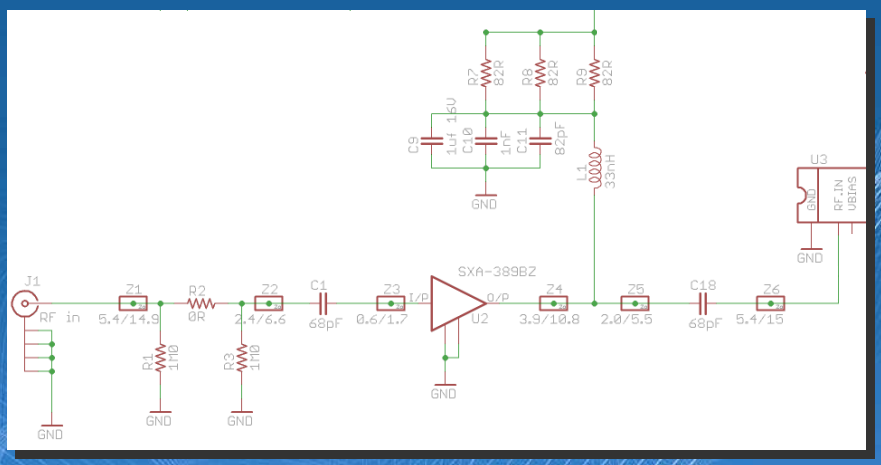

•The first stage amplifier is a SOT89 package for good thermal performance.

•Note the input attenuator. Currently configured for 0dB, R1 and R3 aren't installed but a value needs to be used for the circuit schematic and layout.

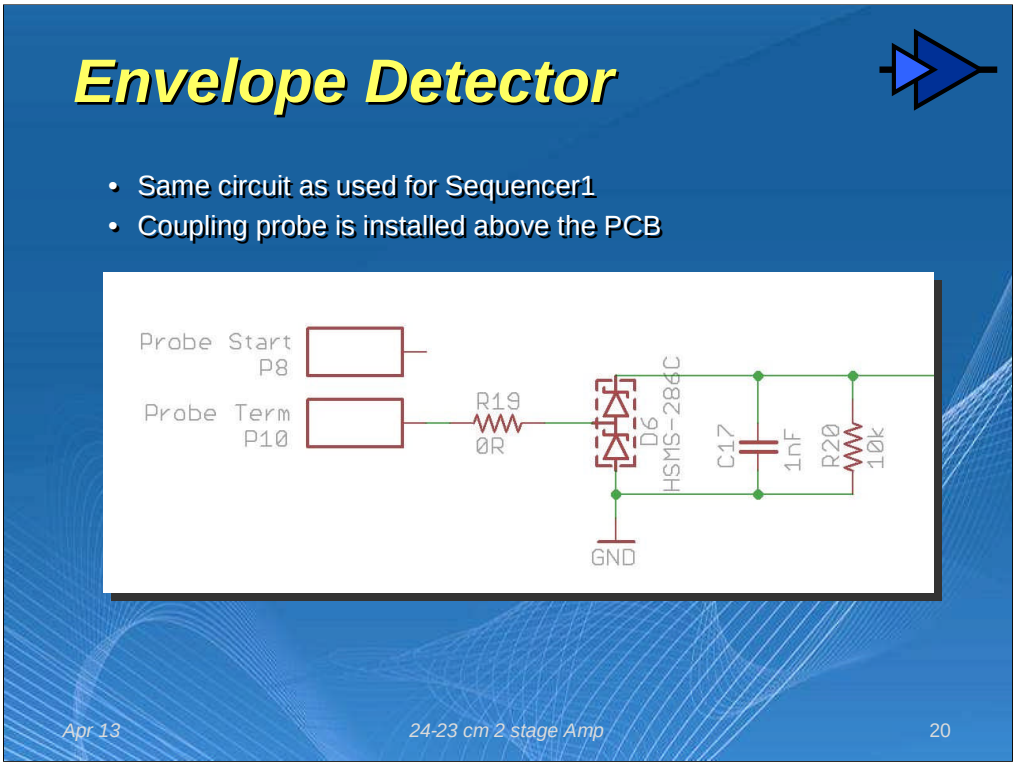

•In the field it can be comforting to know that you've got RF output & it's modulating.

•The Probe is a piece of insulated wire atop the output track so pads are provided on the PCB for start and end.

Interstage Matching

LL Smith Chart matching from RF Dude

- Start with SGA 7489 S22 and work toward RA18H S11
- Use Zplots to get S11 or S22 from Touchstone SP1/SP2 format compatible files

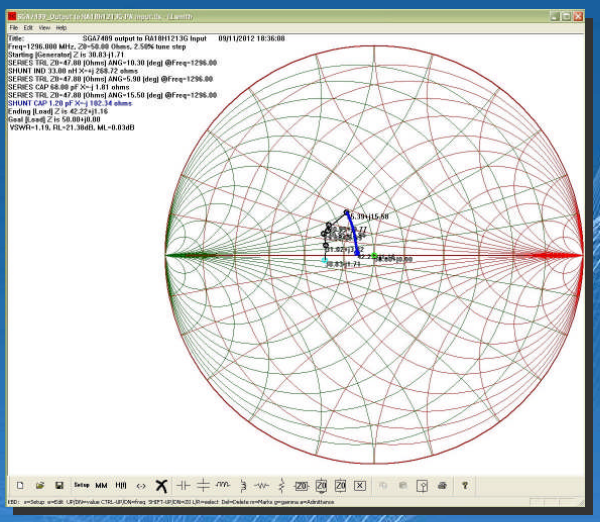

•Many RF component vendors offer scattering parameter files for their amplifiers

•I began by assuming the RA18H1213G input was 50 ohms. I modified my thinking after measuring it's S11. You'll see that reflected in the interstage matching a little further on in the presentation.

•LL smith is a free and very easy to use go to www.rfdude.com then onto the software tools section.

•Zplots is also a great freebie.

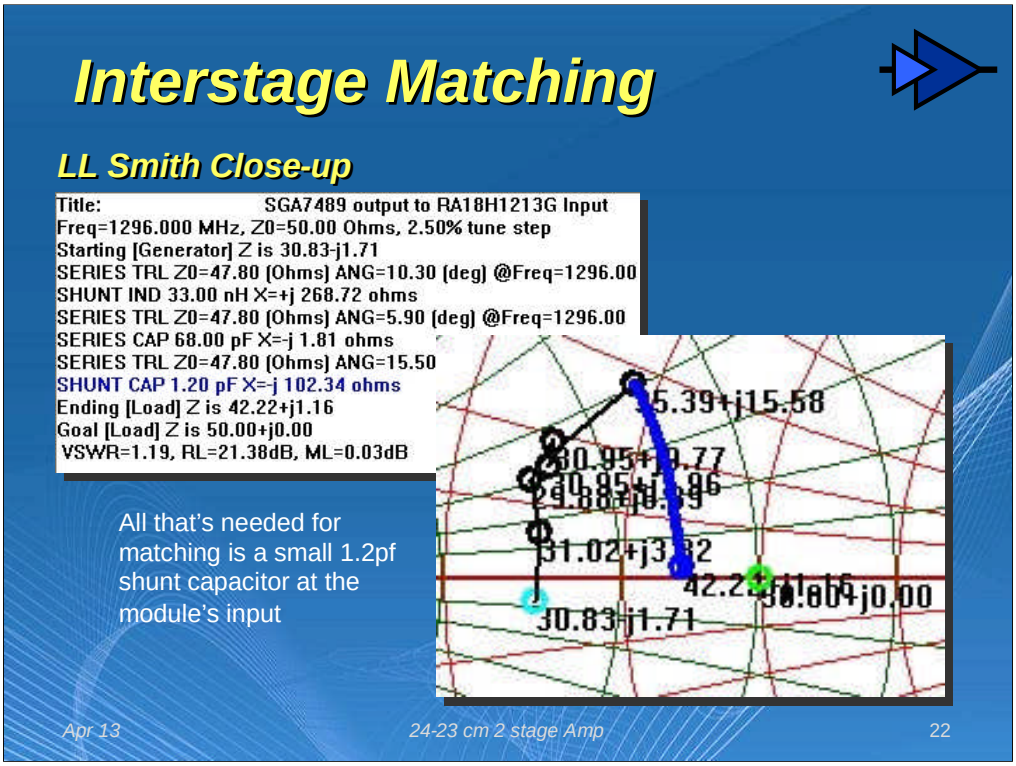

•The LL Smith list shows Input interstage components and TL sections

•Other stuff you can do with LL Smith – change frequency –draw VSWR and Q circles

•Note the blue line on the Smith chart is caused by the 1.2pf shunt cap, gets the input back to 50ohms. Note also that I assumed that the RA18H1213G input was 50 ohms. Again isn't quite correct.

PCB Layout

Careful attention to grounding

- Many vias around grounding points
- Careful placement of bypass caps

All components on the top side no tracks on bottom

- Bottom is ground plane only, can be seated against heatsink ground for lowest ground plane impedance to the module.

Connectorized for ease of assembly

- JST PH 2mm connectors are an inexpensive solution

50 ohm TL segments were extracted from layout

- Back annotate into schematic with length in mm & deg
- TL segment info used for Smith chart matching

•Eagle is used for schematic capture and PCB layout

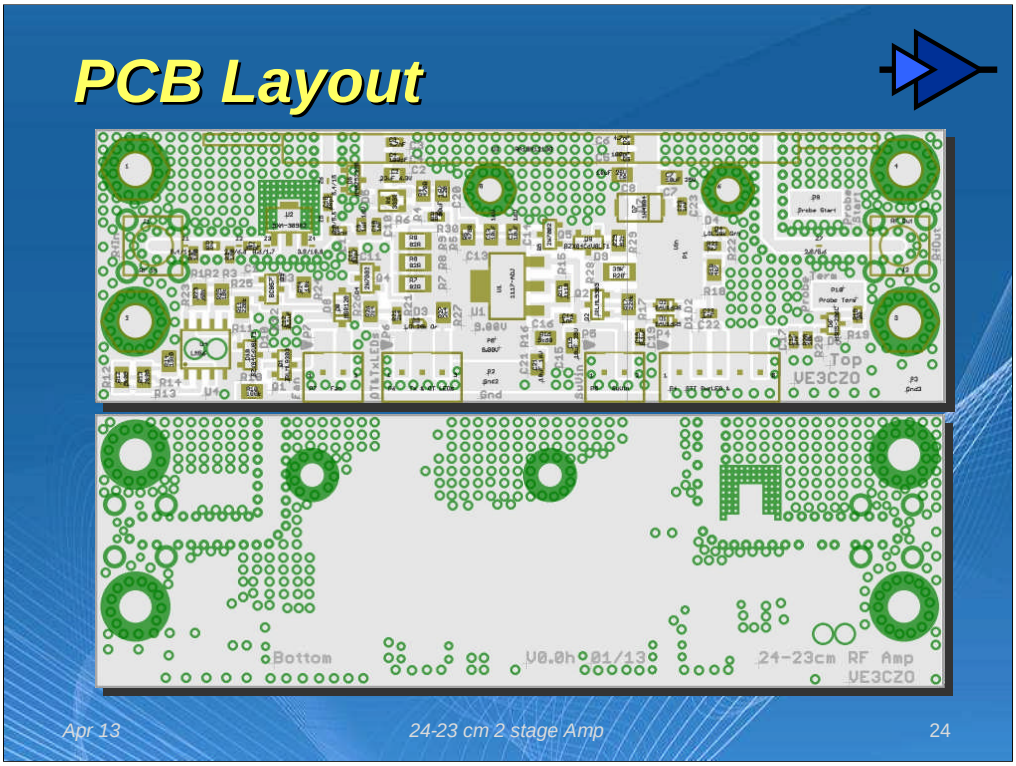

•Here's the PCB top and bottom layouts.

•Note that all components are installed on the top side.

•Lots of vias are present to insure low ground current return impedance for the PA RF current. I had initially though that it might be necessary to fill the vias with solder to create an even lower impedance but in the second iteration found this wasn't necessary.

PCB Layout

Coplanar waveguide transmission line traces

- Wcalc used to determine dimensions for 50Ω on FR4 PCB
- Corner calculator
- Surface mount SMA
- Special library parts for TL resistors
  - 1mm pads
  - no place

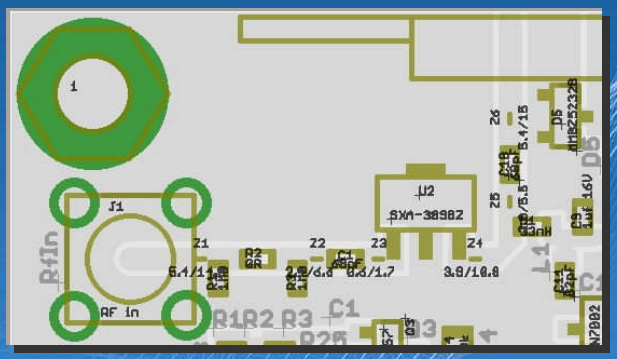

Wcalc CPW on FR4

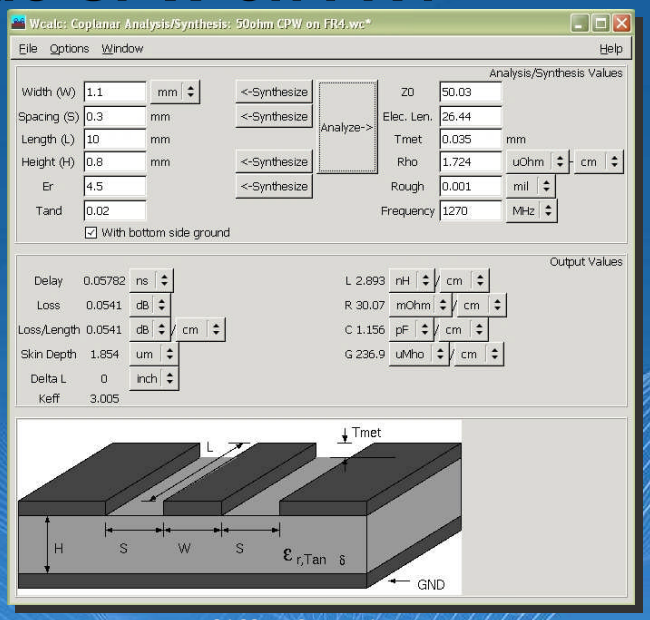

TL Corner Calc

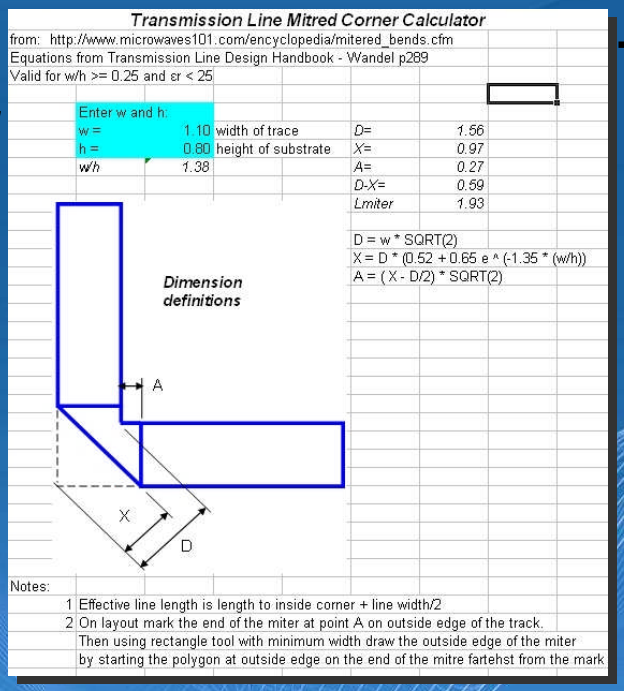

Transmission Line Mitred Corner Calculator

from: http://www.microwaves101.com/encyclopedia/mitered_bends.cfm
Equations from Transmission Line Design Handbook - Wandel p289
Valid for w/h >= 0.25 and er < 25

Enter w and h:				
w =	1.10	width of trace	D=	1.56
h =	0.80	height of substrate	X=	0.97
w/h	1.38		A=	0.27
			D-X=	0.59
			Lmiter	1.93

D = w * SQRT(2)
X = D * (0.52 + 0.65 e ^ (-1.35 * (w/h))
A = (X - D/2) * SQRT(2)

Notes:
1 Effective line length is length to inside corner + line width/2
2 On layout mark the end of the miter at point A on outside edge of the track.
Then using rectangle tool with minimum width draw the outside edge of the miter
by starting the polygon at outside edge on the end of the mitre fartehst from the mark

This corner calculator is available form microvwaves101.com

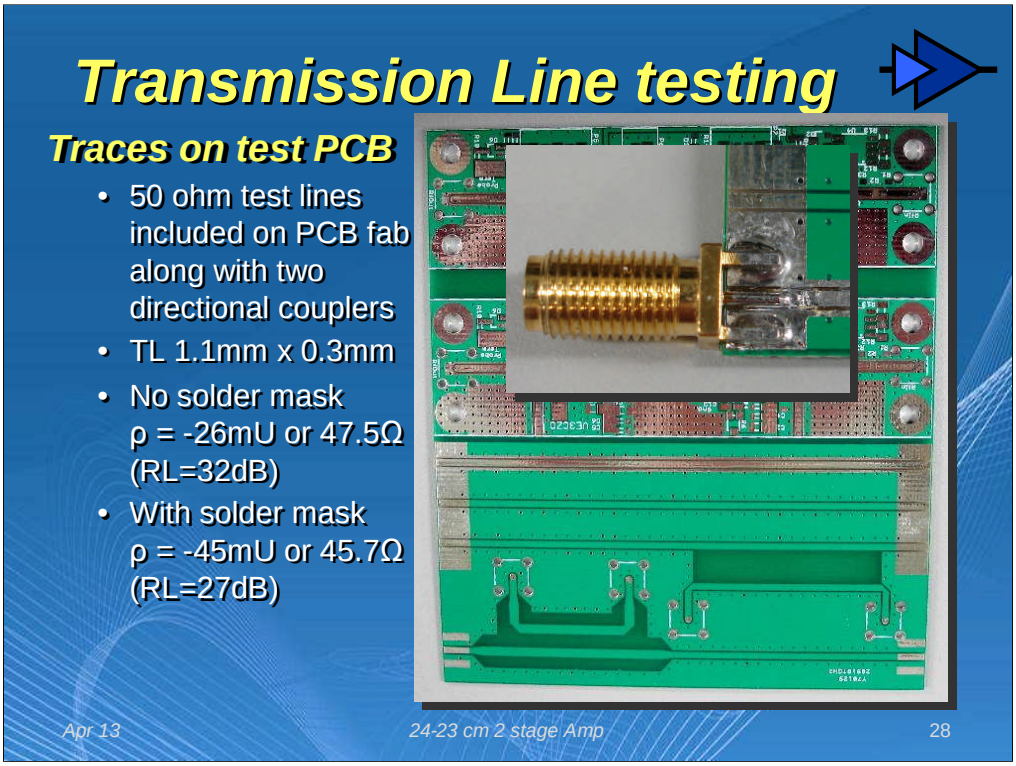

•Before putting a lot of RF power out of the module onto the PCB transmission line track I wanted to make sure that it was close to 50 ohms

•The first iteration PCB contains 2 tiled amplifier boards and the rest of the PCB was used as a test area with two 50 ohm tracks, a 20dB 23cm directional coupler and a 10dB 13cm directional coupler.

•Each test line was terminated in 2x100ohm resistors in one end and a SMA connector on the other.

TL Testing

In process monitor added to V0.0h PCB fab

- Transmission line - 1mm x .3mm x 100mm
- Ave ρ = +16mU or 51.6Ω (RL=36dB)
- Std dev 16 samples 4.6mU

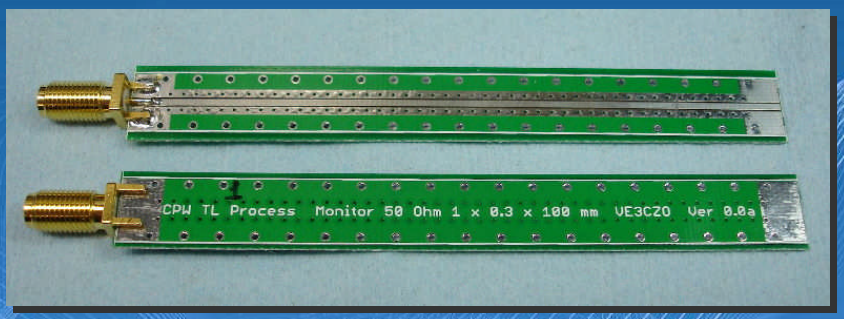

•For the iteration I added an in-process monitor for the 50 ohm TL Track.

•The standard deviation is a bit disappointing.

PCB build & test

Begin populating the PCB in stages & test each function

- PTT switch and associated components
- 9.0V LDO regulator output voltage correct & stable

Next populate then test the 1st stage amplifier

- Surface mount the SMA connectors
- Power and test the amplifier without the module

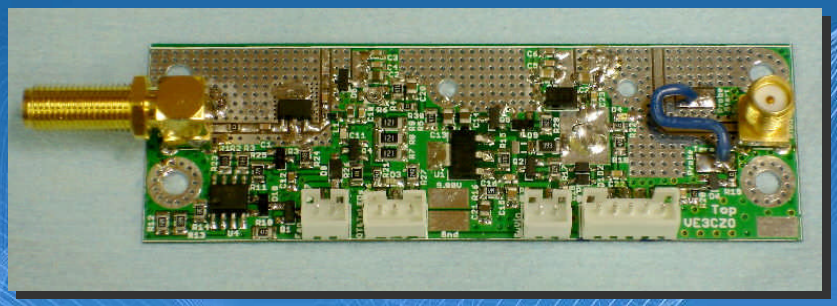

•The assembly document has many more construction and test details.

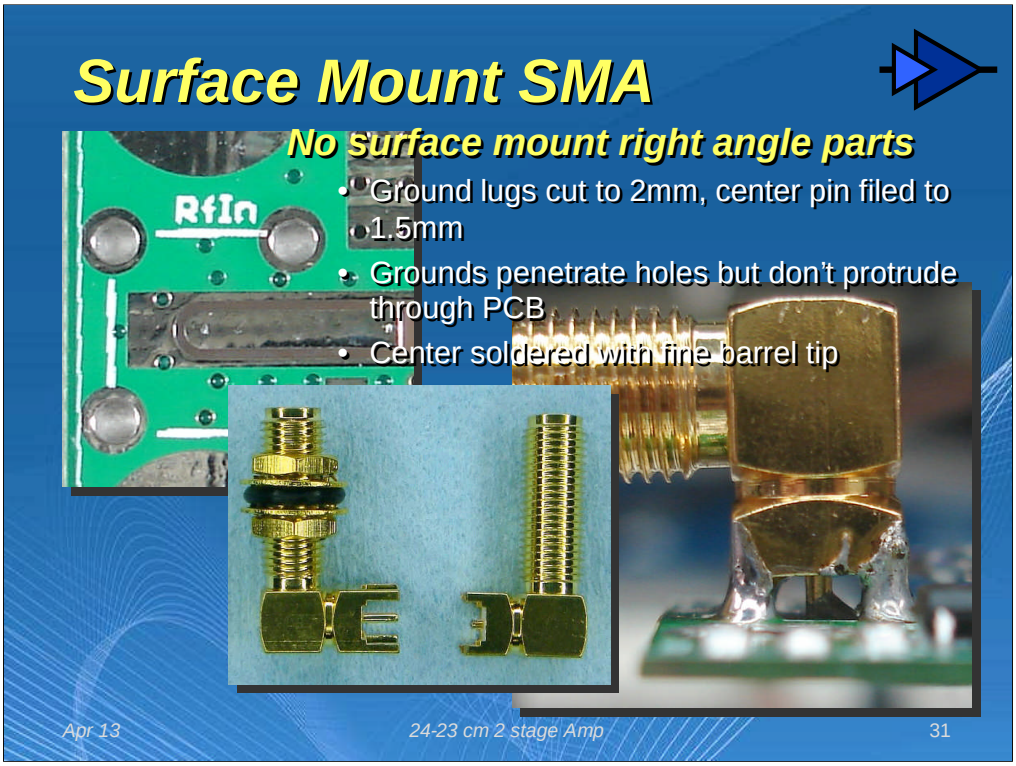

•Installing these connectors takes a bit of practice

•Make the ground liugs 2mm, just long enough so snake a soldering iron tip into the center conductor.

•File the center conductor so that it's 1.5mm. This can get a bit tricky as in the parts I had the center conductor on the right angle connectors isn't fixed so floats up and down. I had to keep pulling it up with a pair of small tweezers to make sure it was fully extended.

•The connector should fit so that the ground lugs don't protrude through the PCB and the center conductor is flush with and meets the transmission line track.

•Tin the bottom of the center conductor to get a good solder covering but wick away any excess solder. There shouldn't be a solder ball on the center lead, just a thin layer of solder

•Solder any two diagonally opposite ground lugs to the PCB and make sure the connector is oriented correctly, perpendicular to the PCB, the barrel parallel to the PCB, and the center conductor touching the transmission line track. If the center conductor has been pushed up and isn't touching it can be pulled back down to meet the PCB using a fine pair of tweezers.

•I use liquid solder flux to wet the TL track and center conductor then using a file barrel soldering iron tip solder the center conductor to the transmission line. Try to get a solder meniscus formed on the inside part of the track as shown in the picture.

•Check the connection with an ohm meter, then solder the two remaining ground lugs.

1st Stage Amp Tests

- AV 19.5dBm
- Quite wide band

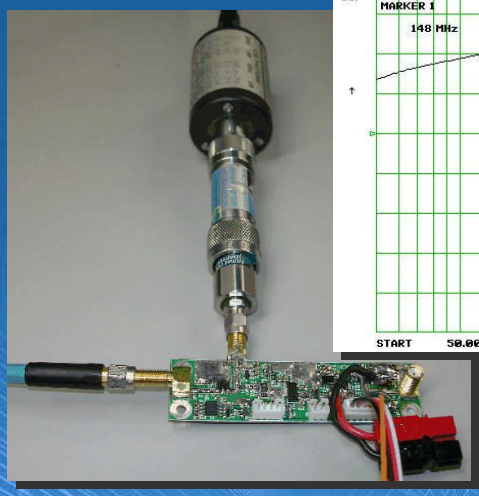

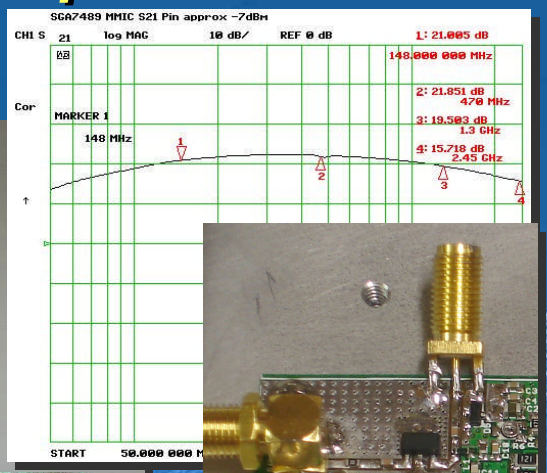

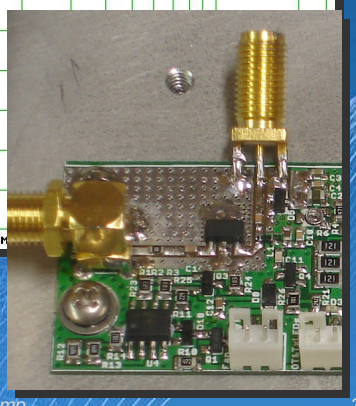

1st Stage Amp Tests

- P1 20 – 21 dBm
- Input return loss 15db

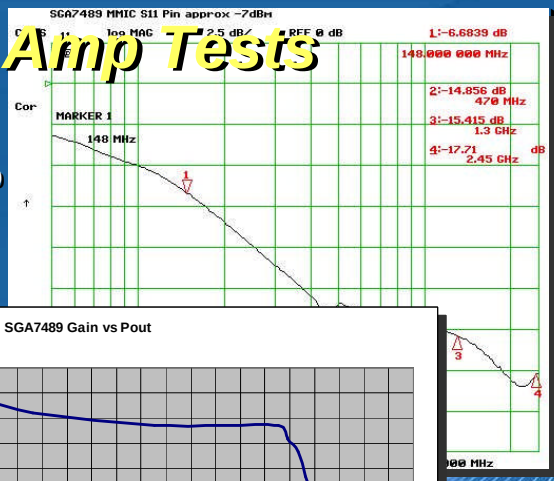

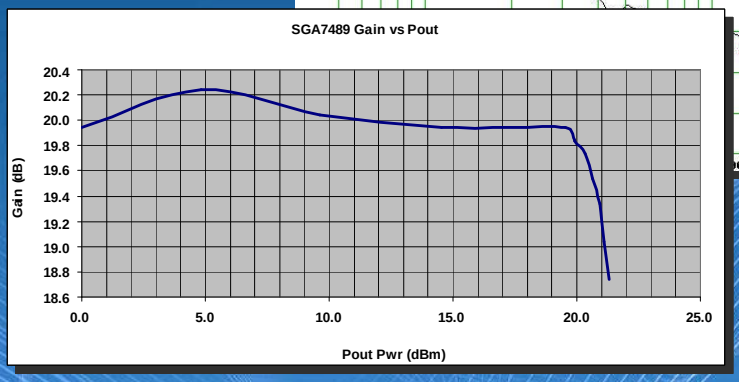

PCB build & test

Then populate and test the Fan thermostat

- Verify fan & over temperature thresholds
- Easily done by holding a soldering iron near the LM56

Populate all remaining components

- Modulation envelope detector

Then mount the RA18H1213G module on the heatsink & wire it up to the PCB…there are a few challenges here…

RA18H Thermal Challenges

Info from datasheet

- Efficiency is < 30%
- For Po = 34W heat dissipated at Vcc=13.8V is 87W
- For reliability case temperature should not exceed 60 deg C and 90 deg C in extreme conditions

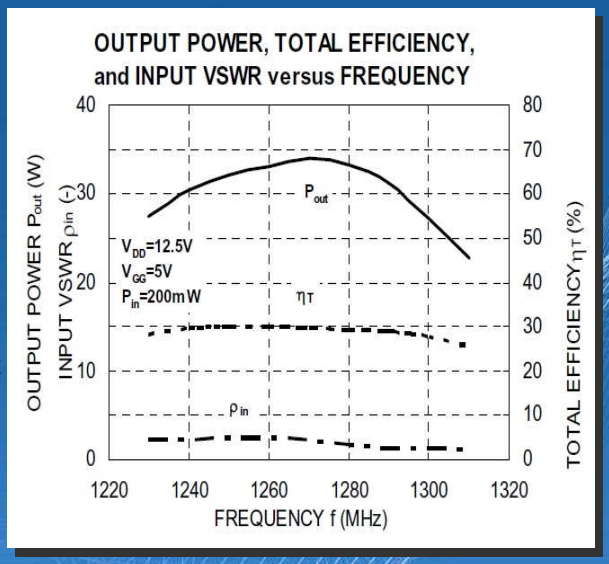

RA18H Thermal Challenges

What to do with a module that has flanges?

- Center of module is approx 0.5mm above heatsink
- Standard thermal compound won't work across gaps

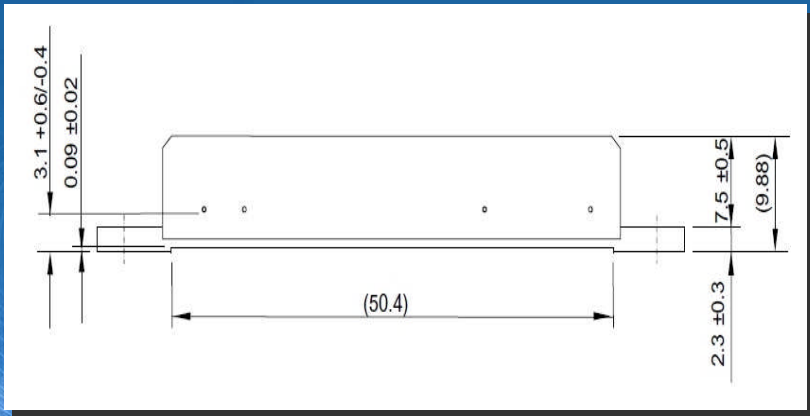

RA18H Thermal Challenges

What others have done with the flanges…

- DEMI took a belt sander to them
- Others filed the flanges flat then sanded the bottom smooth

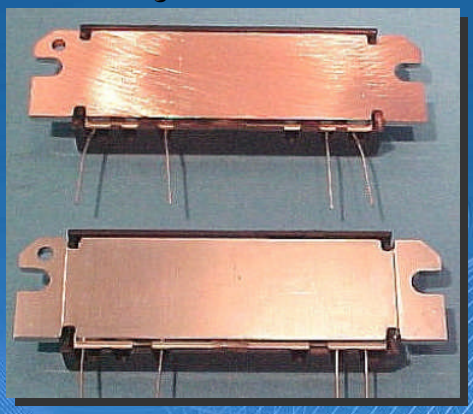

RA18H Thermal Challenges

Buy Why is the mounting surface flanged?

- For reliability according to Mitsubishi G2K-R-051201

1.Substrate Crack Mechanism

1.Module flange and substrate have a bend by bimetal effect.

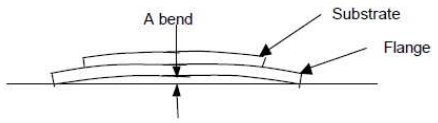

2.RF Power transmitting,
The temperature of flange and chassis is increase by loss.
The flange are extending by thermal at first and the amount of bend is drop away.

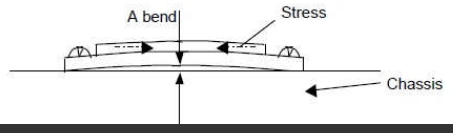

RA18H Thermal Challenges

Reliable operation means slow temp changes

- Ok if the thermal impedance flange to heatsink is very low

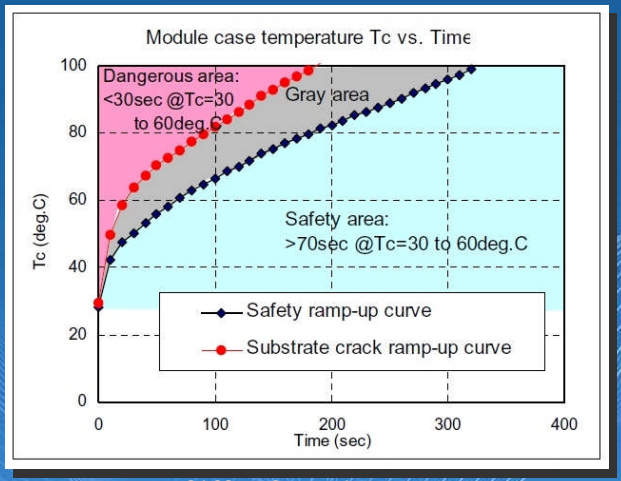

RA18H Thermal Challenges

Mitsubishi Recommended thermal compound

- AN-GEN-001-B App Note – Use ShinEtsu G746

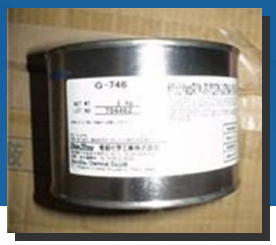

ADVANTAGE:

1. "ShinEtsu G746" has excelent thermal conductivity and which is 3 times improved compare to previous type.
2. "ShinEtsu G746" has wide range of usable temperature.

GENERAL CHARACTERISTICS:

1. Weight ratio: 2.66 @25deg.C
2. Thermal conductivity: 1.6x10E-3 (cal/cm-sec-deg.C)
3. Resistance : 1.2x10E14 (ohm-cm)
4. Temperature range: -50 to +150deg.C

(Above parameters will be subject to change by ShinEtsu Chemical Industry Co.,

It's amazing the stuff you can dig up on the internet.

Shin Etsu don't use the classic Watts per meter Kelvin for thermal conductivity but rather cal/cm-sec-deg.C

The compound is an insulator

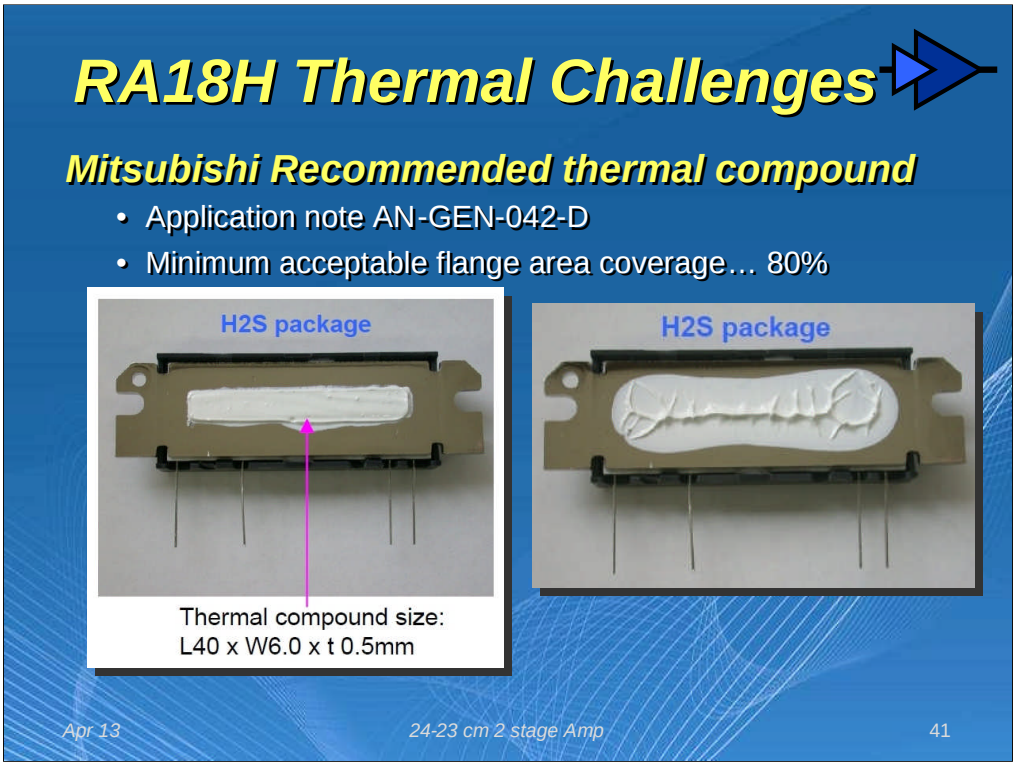

•This is what the thermal compound is supposed to look like after initial application then after the device is applied to and subsequently removed from a heatsink.

RA18H Thermal Challenges

ShinEtsu G746

- Thermal Conductivity 1.6*10E-3 cal/cm-sec-deg.C is about 0.7 W/m.k

40	*R18H1213G Operating Parameters*			
41	RF input Power	200	mW	
42	RF output Power	34	Watts	
43	DC Supply Voltage	13.8	Volts	
44	Efficency	28	%	
45	*DC Supply Power*	*121*	*Watts*	
46	*DC Supply Current*	*8.8*	*Amps*	
47				
48	*Thermal Efficiency is given in W/m.K*			
49	***Conductive Heat Transfer***		***q=kAdT/s***	
50	q=heat transfer in Watts		k=Thermal conductivity of the material (W/m.K)	
51	A=heat transfer area (m2)			
52	dT=temp difference across material (degC)			s=material thicnkess (m)
53				**Notes**
54	q	87	Watts	power to be dissipated
55	A	0.0008568	m^2	module is 50.4x17mm
56	k	0.7	W/m.K	compound under PA thermal efficiency
57	s	0.0005	m	thiickness between PA & heatsink
58	target dT	20	deg K	target max temp rise
59	***Temp rise dT***	**72.9**	***deg C***	

Calculation assumes 100% flange area coverage
There is no compound in the flange fastener area

•A 72 deg. C temperature rise is not very good!

•The calculation is a bit pessimistic as the gap isn't a uniform .5mm it's highest about .45mm in the center of the flange and is smaller as you go out to the mounting screw area.

•Also this assumes no heat conduction through the ground area mounting portion of the flange

RA18H Thermal Challenges

Laird Tgrease 880

- Will not dry out settle or harden
- Fills microscopic irregularities
- Supplied in 0.5 1 or 3 kg containers

Luckily it's also Available from Digi-Key in 30cc containers

PROPERTIES	
Color	Grey
Density	2.73g/cc
Viscosity Brookfield Viscometer	<1,500,000cps TF spindle at 2rpm (helipath) and 23°C
Temperature Range	-40 – 150°C (-40 – 302°F)
UL Flammability Rating	94 V0. File E180840
Thermal Conductivity	3.1 W/mK
Thermal Resistance @ 10 psi @ 20 Psi @ 50 psi	 0.014°C-in^2/W (0.090°C-cm^2/W) 0.010°C-in^2/W (0.065°C-cm^2/W) 0.009°C-in^2/W (0.058°C-cm^2/W)
Volume Resistivity (ASTM D257)	9 x 10^{13} Ohm-cm

Apr 13

43

•This product has much better thermal conductivity than the ShinEtsu compound.

•It fills gaps, wont dry out or harden!

RA18H Thermal Challenges

Thermal Calculator

- Laird Tgrease 880
- 3.1 W/m.K

40	***R18H1213G Operating Parameters***			
41	RF input Power	200	mW	
42	RF output Power	34	Watts	
43	DC Supply Voltage	13.8	Volts	
44	Efficency	28	%	
45	*DC Supply Power*	*121*	*Watts*	
46	*DC Supply Current*	*8.8*	*Amps*	
47				
48	***Thermal Efficiency is given in W/m.K***			
49	***Conductive Heat Transfer***		***q=kAdT/s***	
50	q=heat transfer in Watts		k=Thermal conductivity of the material (W/m.K)	
51	A=heat transfer area (m2)			
52	dT=temp difference across material (degC)			s=material thicnkess (m)
53				**Notes**
54	q	87	Watts	power to be dissipated
55	A	0.0008568	m^2	module is 50.4x17mm
56	k	3.1	W/m.K	compound under PA thermal efficiency
57	s	0.0005	m	thiickness between PA & heatsink
58	target dT	20	deg K	target max temp rise
59	***Temp rise dT***	***16.5***	***deg C***	

Calculation assumes 100% flange area coverage
There is no compound in the flange fastener area

A temperature rise of 20 deg. C sounds a lot better for reliable operation over time!

RA18H Mounting

Heatsink mounting flatness recommendation

- From datasheet & failure analysis G2K-R-051201-1
  - Heat sink flatness must be less than 50 µm (a heat sink that is not flat or particles between module and heat sink may cause the ceramic substrate in the module to crack by bending forces, either immediately when driving screws or later when thermal expansion forces are added).

Causes Cracks

Mounting Surface Ok

Heatsink Preparation

Surface Preparation

- Smooth surface Initially with orbital sander & 120 emery

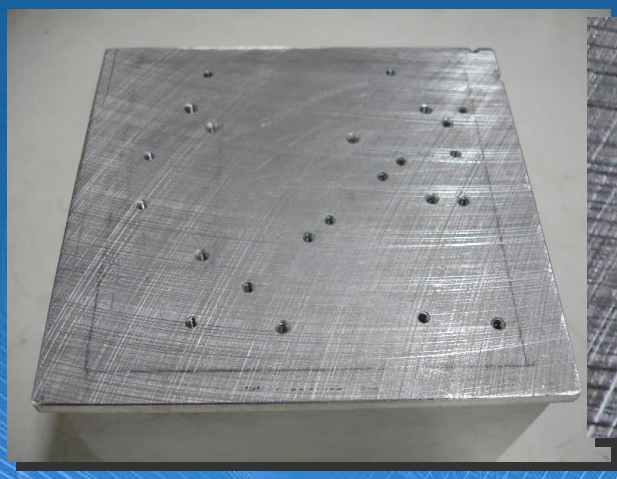

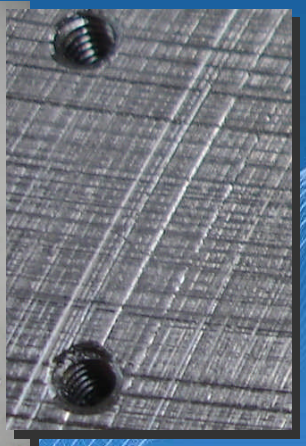

•Just had to look up the grit size for various emery cloths to see if 50u was achievable. It is!

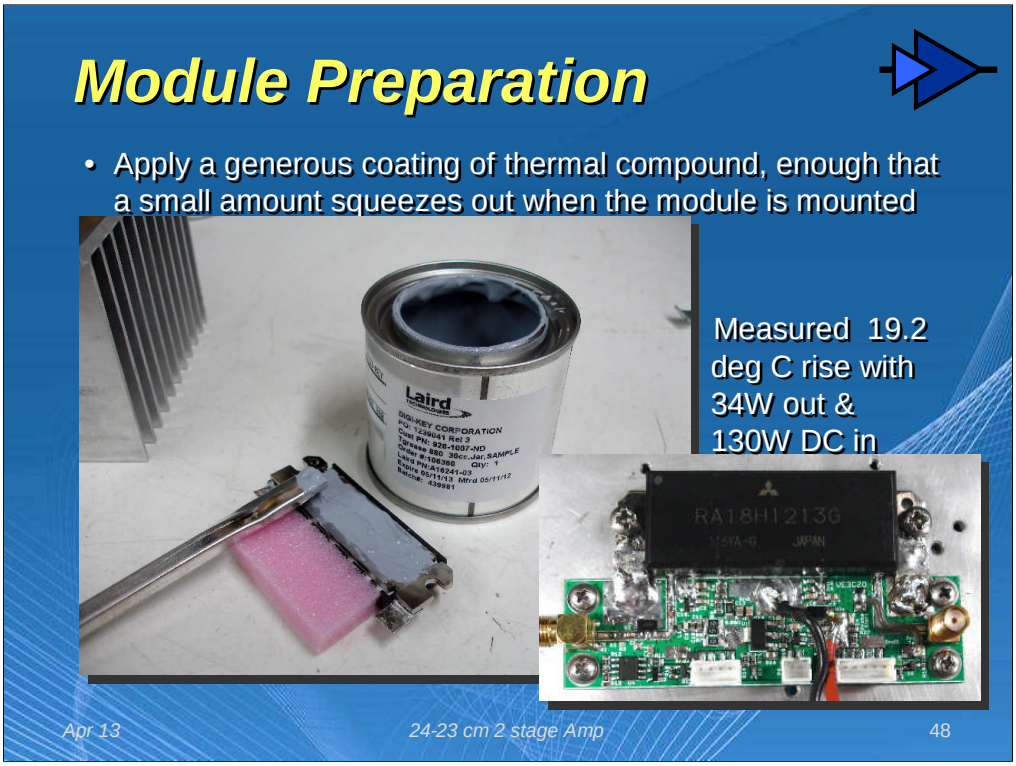

Works really well.

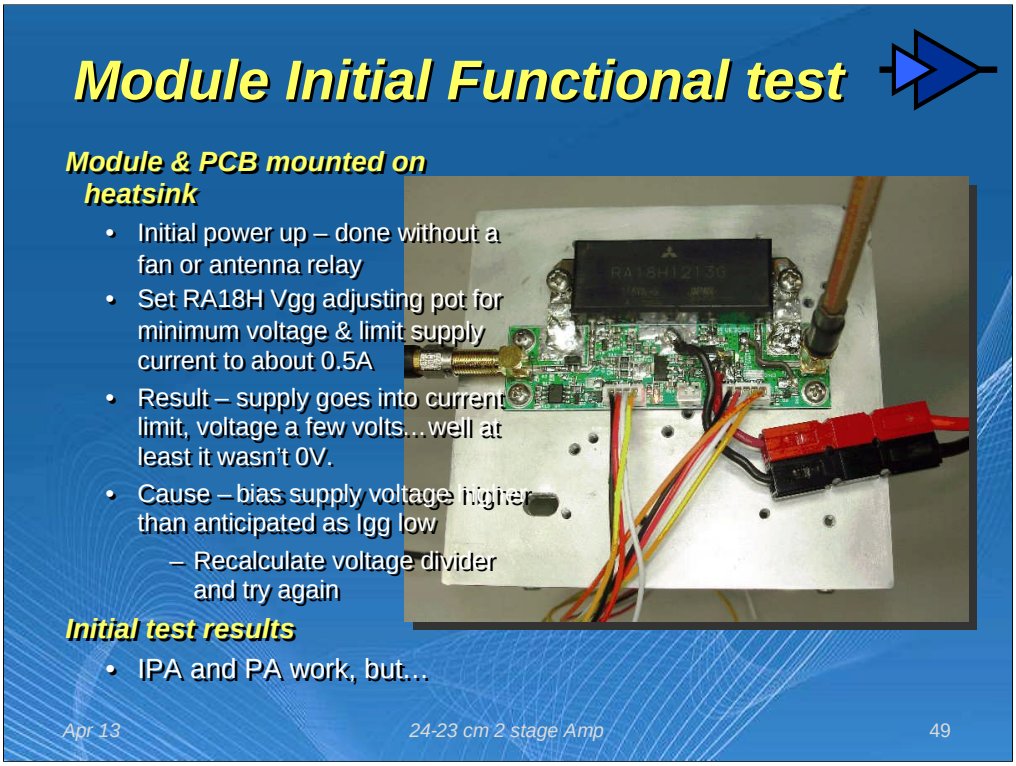

•Current limit supply to prevent catastrophic failure if the circuit is unstable.

•At power up 0V would have indicated a short circuit somewhere. The fact that the supply current limited when at several volts was promising, just had to figure out why.

Module Initial Functional test

Initial test results

- PA isn't stable @ Ibias >2A

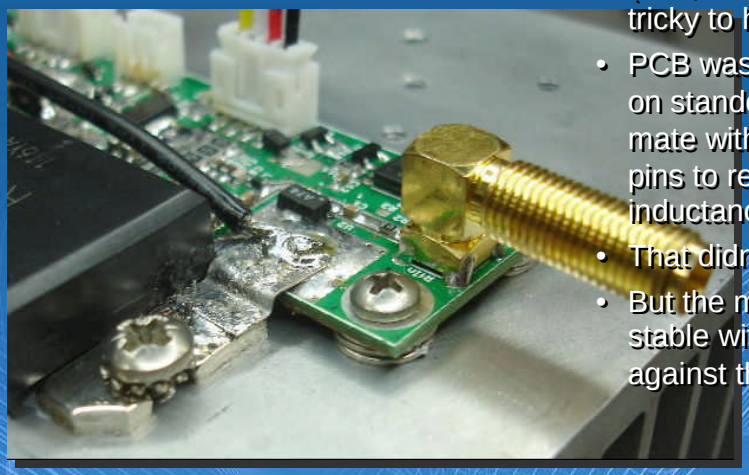

- Gains over 55dB (350,000) a bit tricky to handle!
- PCB was mounted on standoffs to best mate with module pins to reduce lead inductance.
- That didn't work!!
- But the module was stable with PCB flat against the heatsink

•Gain over 55dB that's more than 350,000!

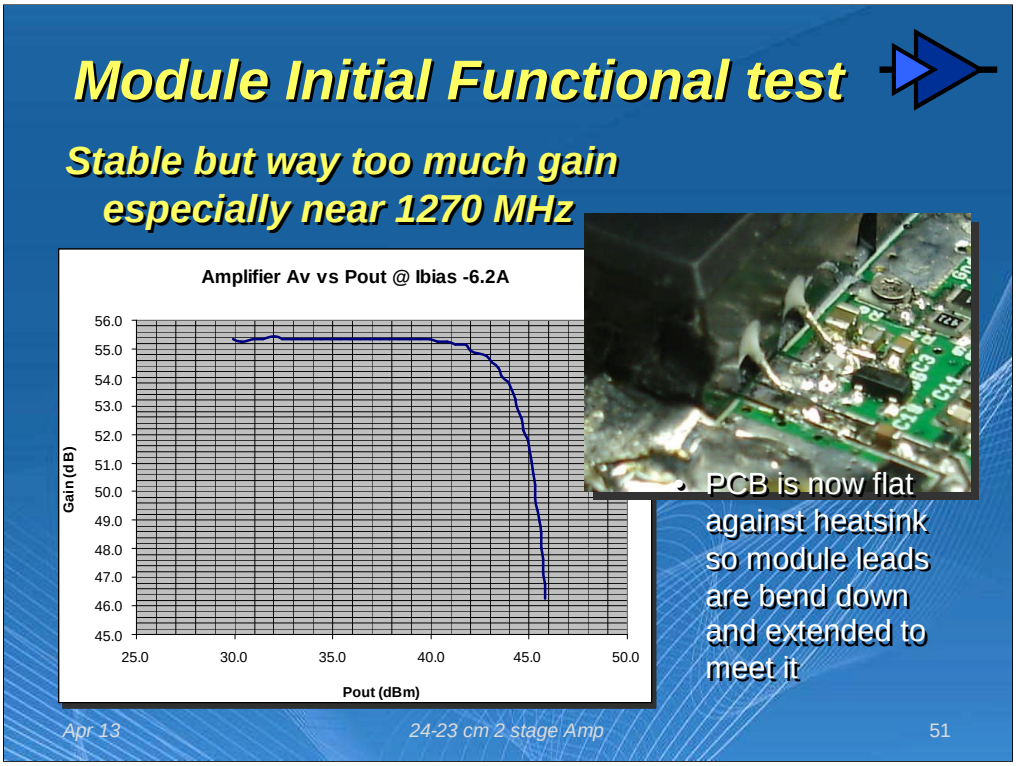

•Gain over 55dB that's more than 350,000!

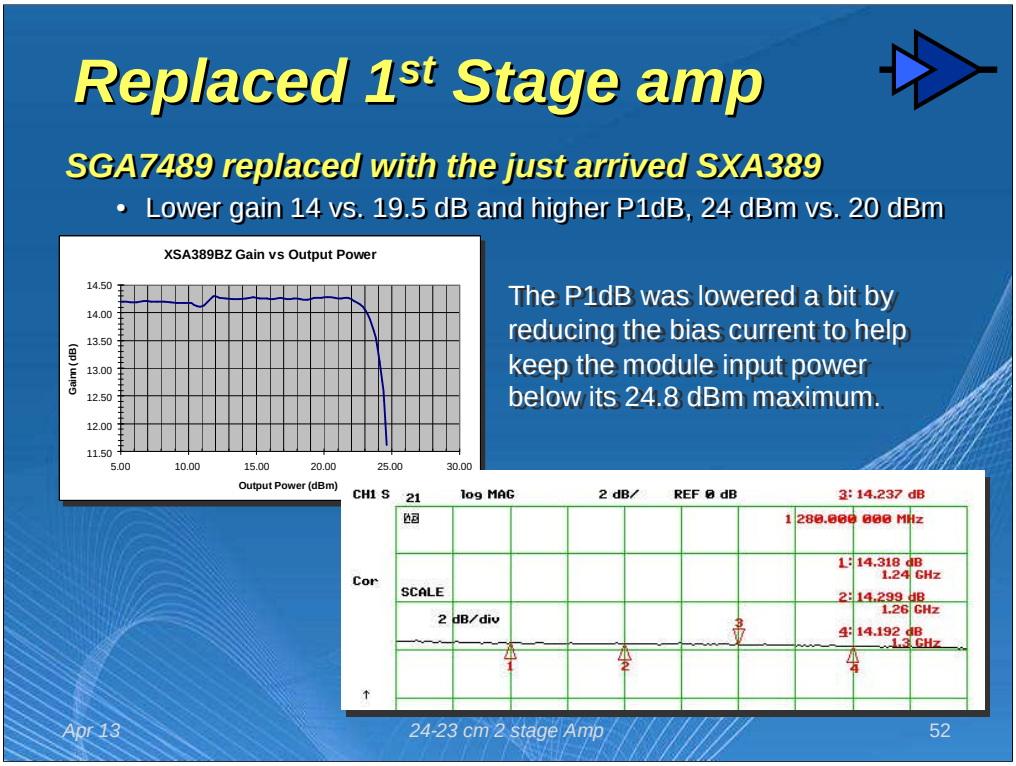

•The higher P1dB was especially important as all module specs are done at 23dBm input power.

•I reduced the bias current to cut down the P1db point so that gain compression would kick in about .5dB earlier as the modulus's maximum input power is 300mW or 24.8dBm

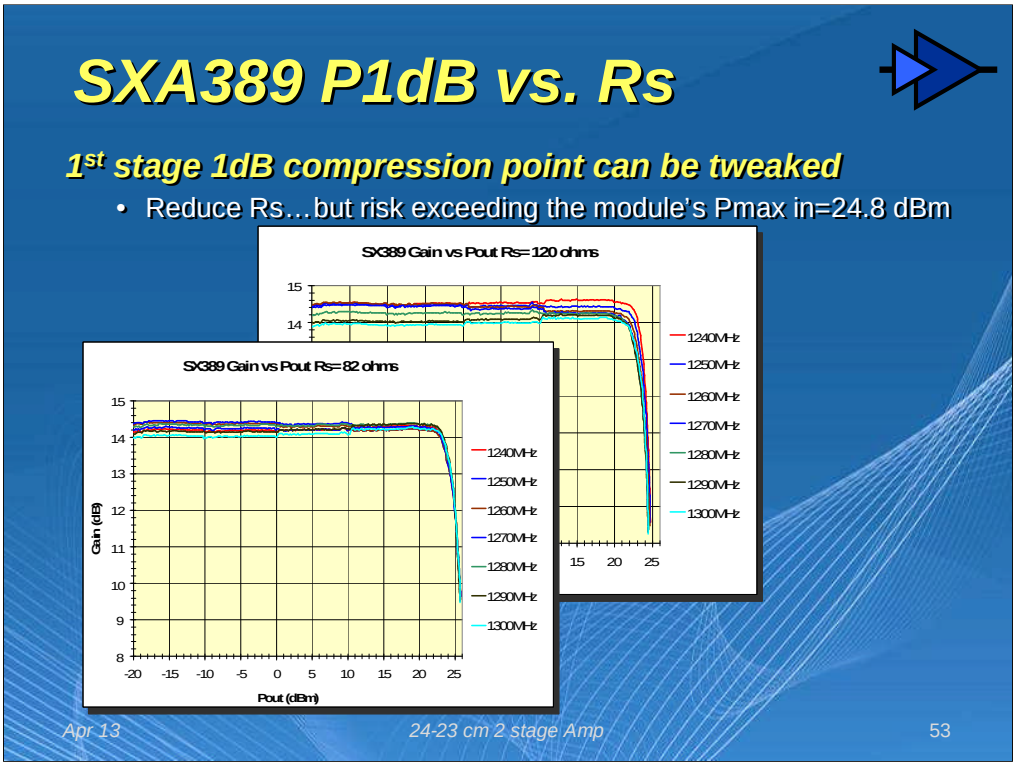

•The higher P1dB was especially important as all module specs are done at 23dBm input power.

•However this is a trade off. You don't want so much output power that you can easily damage the RA18H1213G's input (again 300mW or 24.8dBm). I don't know how much latitude there is in the input power rating before damage but the input pi network appears to be made up of thick film 0805 resistors mounted on the ceramic substrate.

•However this amplifiers output can be increased by reducing the series resistor feeding it from the regulator.

•I tried three different values of series resistance, 120/3 ohms 100/3 ohms and 82/3 ohms and the P1 moved out to 23.2, 23.9, and 24.5 dBm

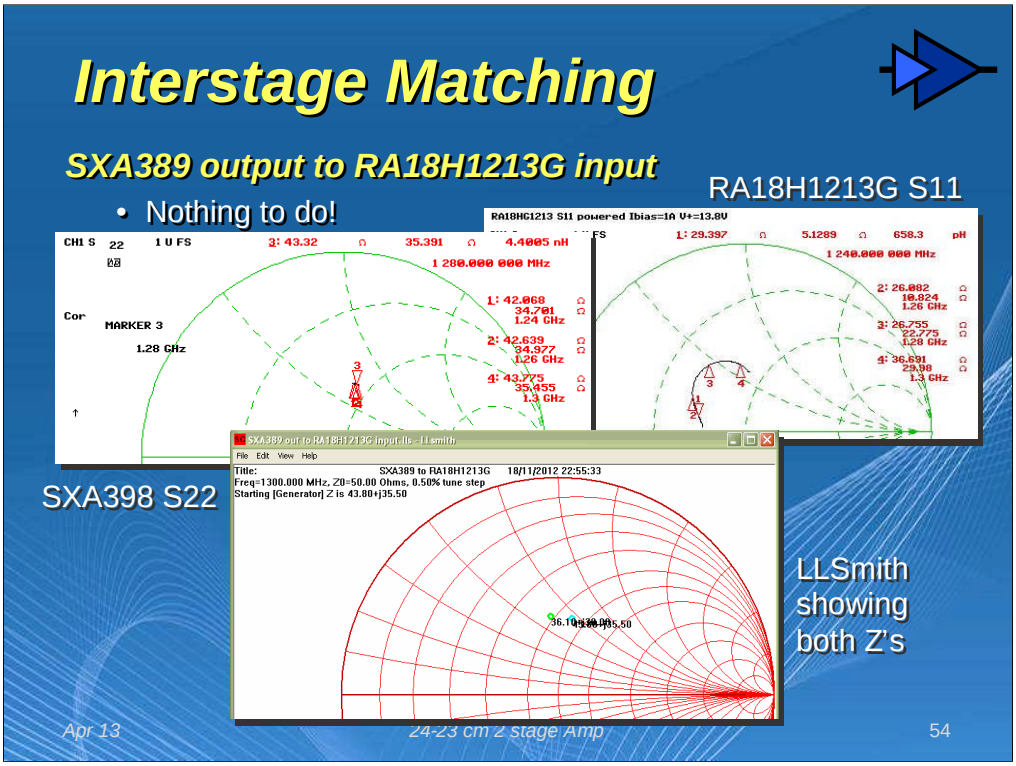

•The two impedances were close enough that no matching circuitry was needed.

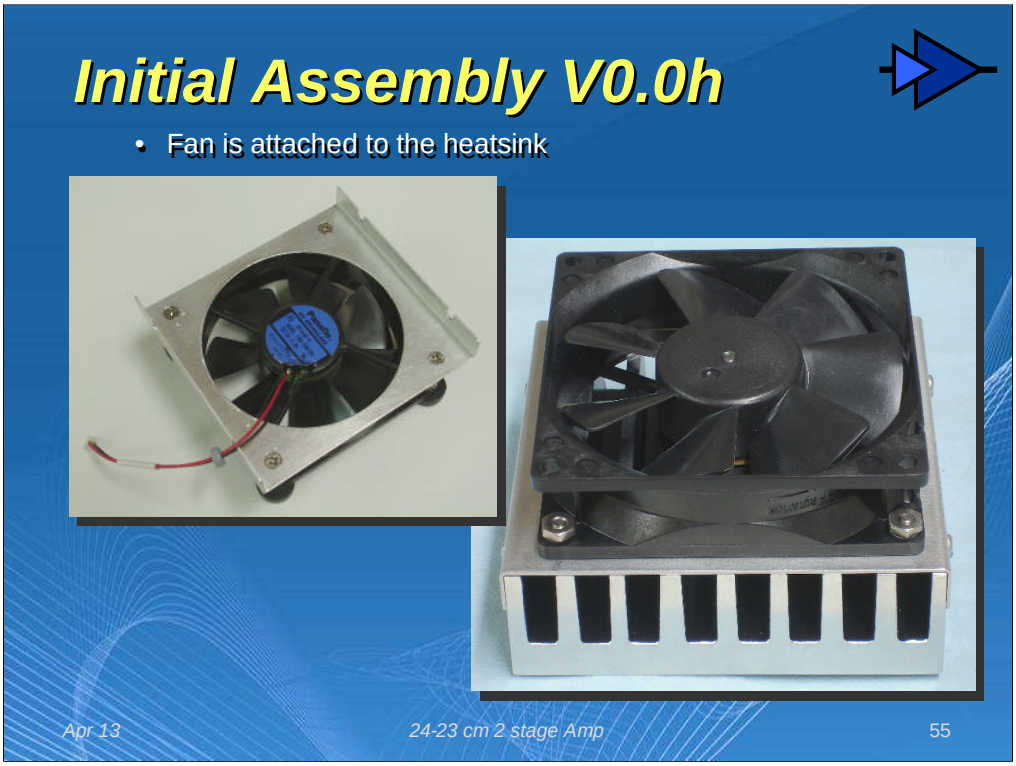

•Usually put feet on the fan so that it sits above the desk surface when testing to improve air circulation around the heat sink.

•Note the ferrite bead on the fan lead. I found that some fans don't like operating in the presence of RF, the ferrite bead takes care of their hesitation.

•A hole is drilled in the heatsink to allow the connector to be pushed through the PCB more on that in the next slide.

•Also there's a piece of heat shrink over the leads where they pop through the heatsink to help prevent chaffing.

•Note the ground lugs that run from the module to the PCB to help lower the ground return impedance. I'm not sure they're absolutely necessary, haven't run the module without them but they are readily available, inexpensive, and help form the PCB and module as a single unit. That is the module isn't attached to the PCB by just the 5 small wire leads, the two ground lugs provide additional support.

•Also note that a hole has been drilled for the fan large enough for the connector to pop through.

•Start with a nice clean Hammond 1590Y enclosure then fill it with holes

•Note that the bottom of the enclosure around the module and PCB has been removed.

•The enclosure fits over the module & pcb and is screwed to the heatsink.

•Details for hole location and size are given in the assembly documentation.

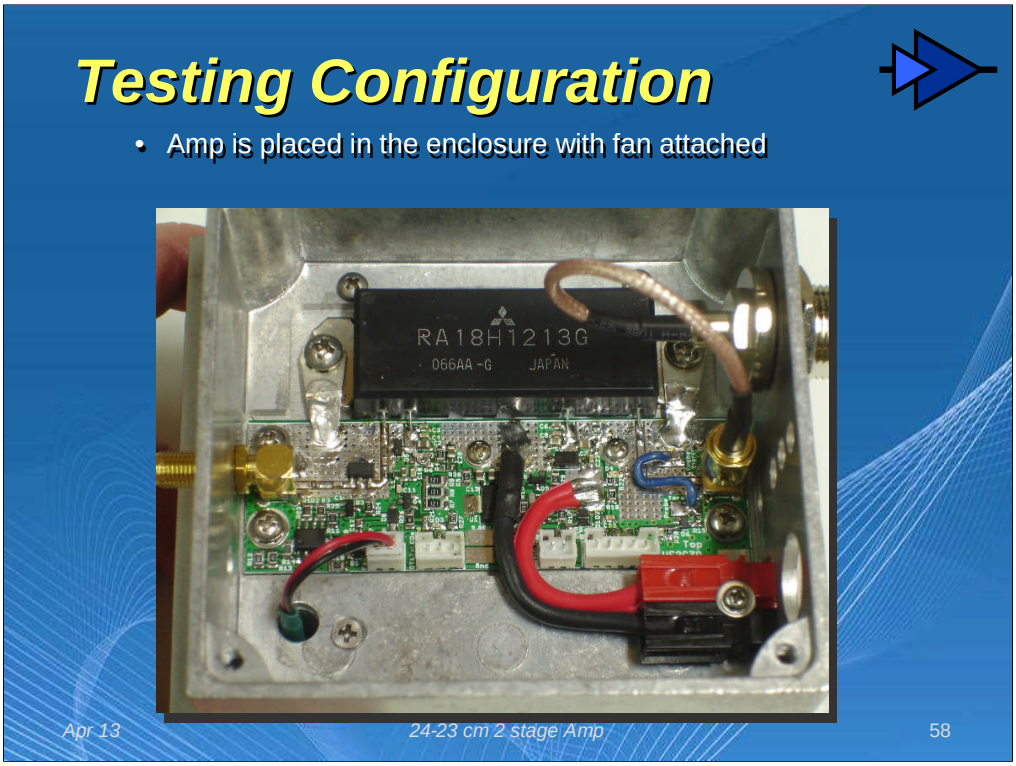

•This is the configuration used for most of the amplifier testing. The 1590 Y enclosure is mounted on the heatsink. The fan is shown in the Fan connector space but for initial testing it's jumpered over to the SwVin connector so that it runs all the time when in transmit.

•An output pigtail runs from the PCB SMA connector to the 'N" output connector, and the input SMA connector is screwed firmly to the chassis. This configuration insures the input and output connectors aren't damaged in handling while testing.

Now on to Measurements

- Ver 0.0e measurements done all done by hand
- Ver 0.0g measurements had help from Labview

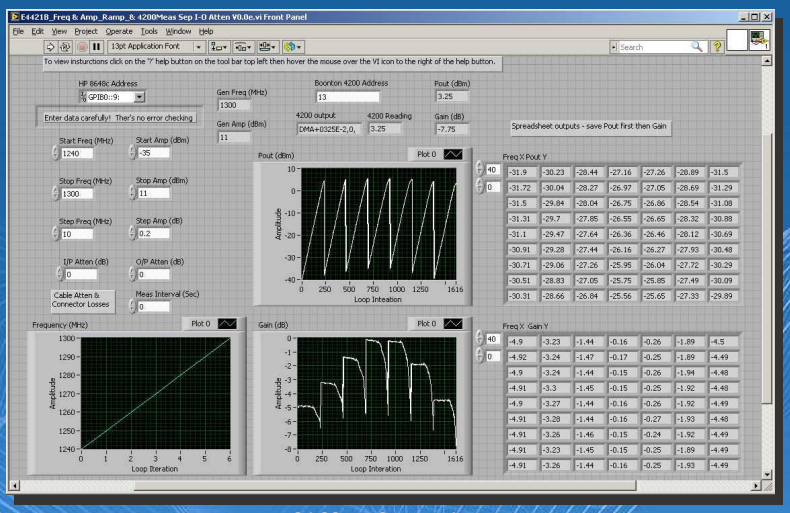

•Upside of Labview – I didn't have to do any more than setup the test and let it run

•Downside of Labview – you tend to take many more measurements and spend quite a bit of time manipulating spreadsheet data

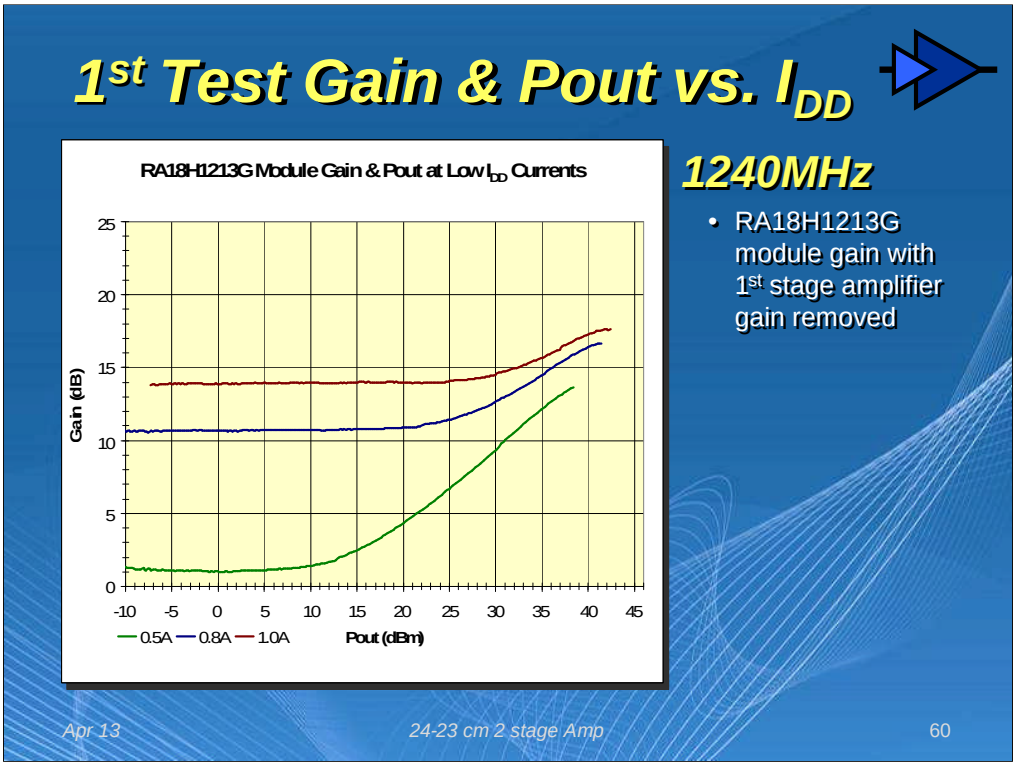

•Gain rising significantly as the input power increased at low bias currents wasn't anticipated

•I though I might have stability problems again, but no…more on this phenomenon later.

PA Frequency Response

- 1st stage frequency response is flat so virtually all variance in the RA18H1213G module

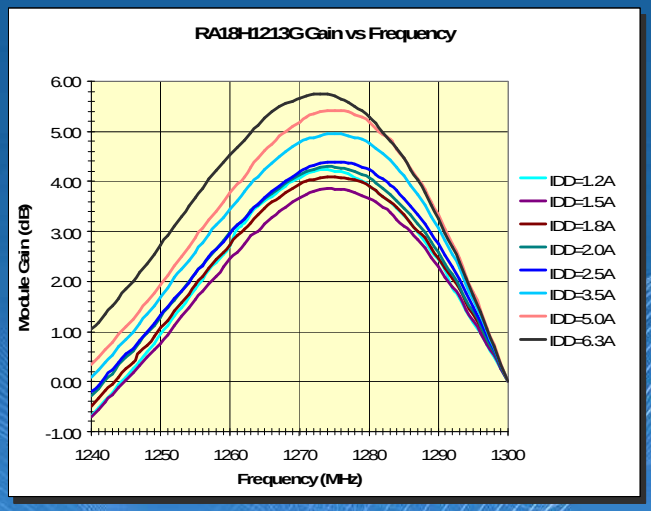

•This graph shows the output gain with -4 dBm input power

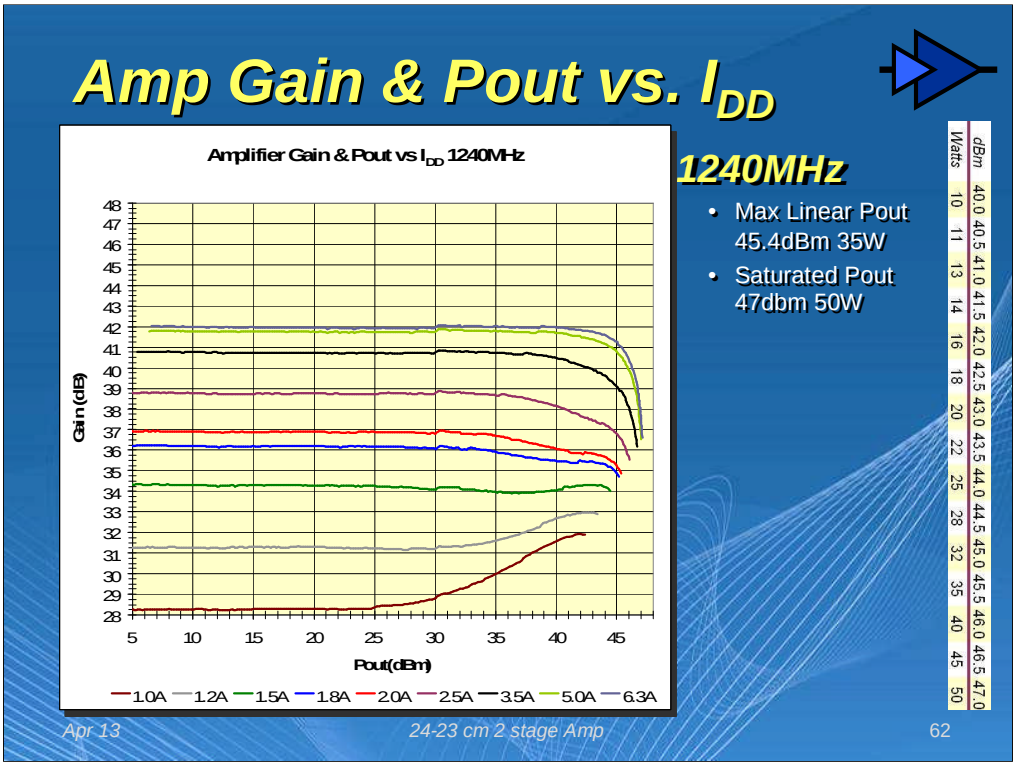

•The graph clearly shows the amplifier's 1dB compression point with various bias settings.

•Note that there isn't a whole lot of output power difference at the 1dB gain compression point over the range of bias settings between 1.5A and 6.3A. If you wish to run the amplifier into saturation however higher bias currents will get you an additional 1 dB to 1.5dB output power.

•Most articles indicate that for linear operation a bias current of 1A should be used. But there isn't enough gain in the module to get full output while keeping the input below its specified maximum level.

•I stopped the RF generator at 11dBm that's about 10.6dBm into the amplifier or very close to 24.6 dBm into the module. And I didn't leave it there very long!

Amp Gain & Pout vs. I_{DD}

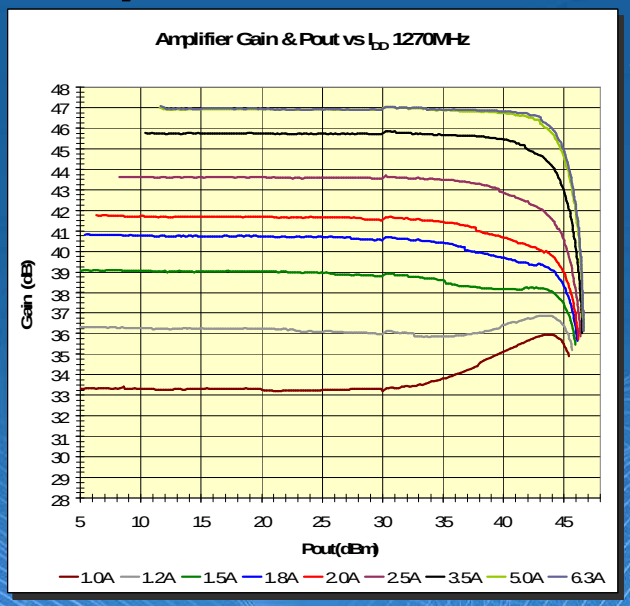

1270MHz

- Max Linear Pout 43.9 dBm 25W
- Saturated Pout 46.5dbm 45W

Watts	dBm
10	40.0
11	40.5
13	41.0
14	41.5
16	42.0
18	42.5
20	43.0
22	43.5
25	44.0
28	44.5
32	45.0
35	45.5
40	46.0
45	46.5
50	47.0

Amp Gain & Pout vs. I_{DD}

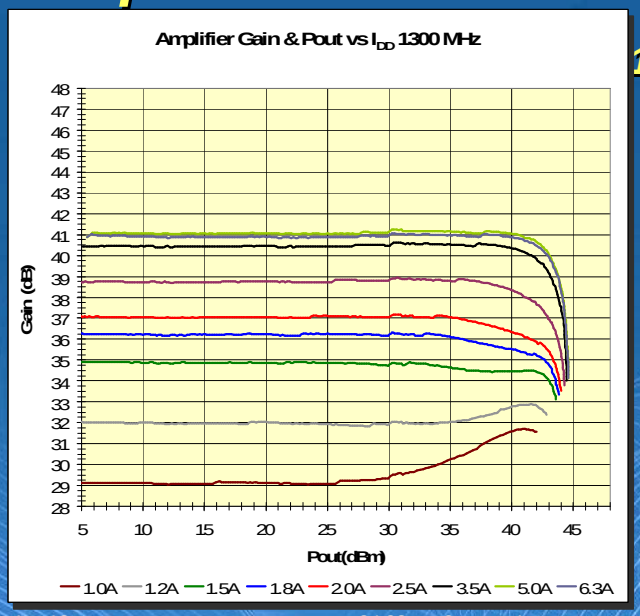

1300MHz

- Max Linear Pout 43dBm 20W
- Saturated Pout 44.5dbm 23W

Watts	dBm
10	40.0
11	40.5
13	41.0
14	41.5
16	42.0
18	42.5
20	43.0
22	43.5
25	44.0
28	44.5
32	45.0
35	45.5
40	46.0
45	46.5
50	47.0

•Readings were taken every 10 MHz over the 1240-1300 MHz span but only 1240, 1270 and 1300 are included in this presentation. If you would like data for the other frequencies drop me and email.

Amp Gain vs. Vsupply

1240MHz

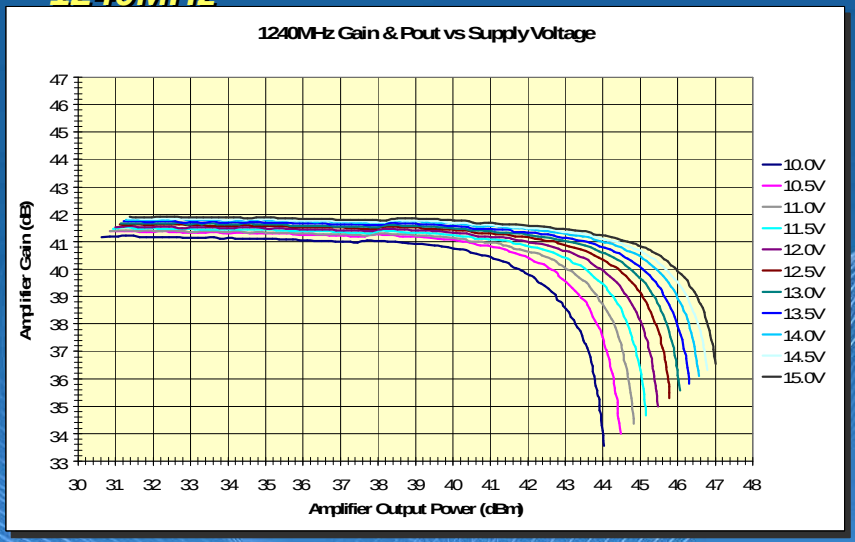

Watts	dBm
10	40.0
11	40.5
13	41.0
14	41.5
16	42.0
18	42.5
20	43.0
22	43.5
25	44.0
28	44.5
32	45.0
35	45.5
40	46.0
45	46.5
50	47.0

•Note that the 1dB compression point is lower and the knee softer as the voltage decreases.

Amp Gain vs. Vsupply

1dB Gain compression points and relative gain versus supply voltage

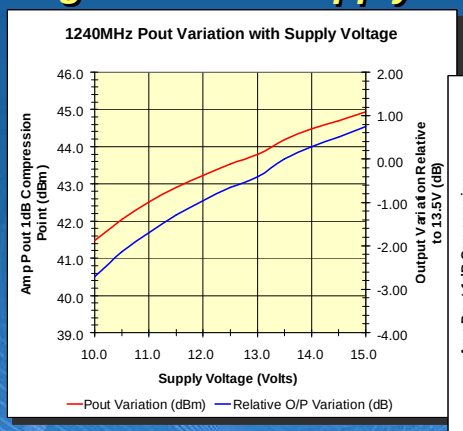

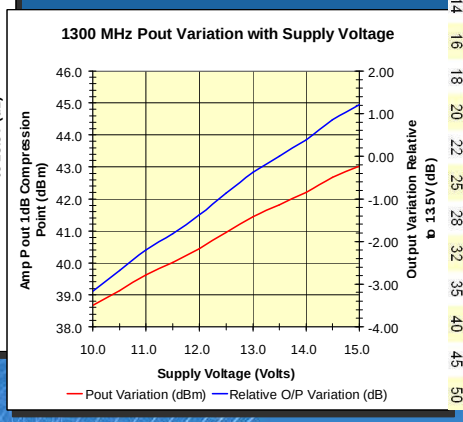

Watts	dBm
10	40.0
11	40.5
13	41.0
14	41.5
16	42.0
18	42.5
20	43.0
22	43.5
25	44.0
28	44.5
32	45.0
35	45.5
40	46.0
45	46.5
50	47.0

•Typically you'll lose about 3dB of output as the supply voltage decreases to 10 volts and gain a dB if the voltage is set at 15V.

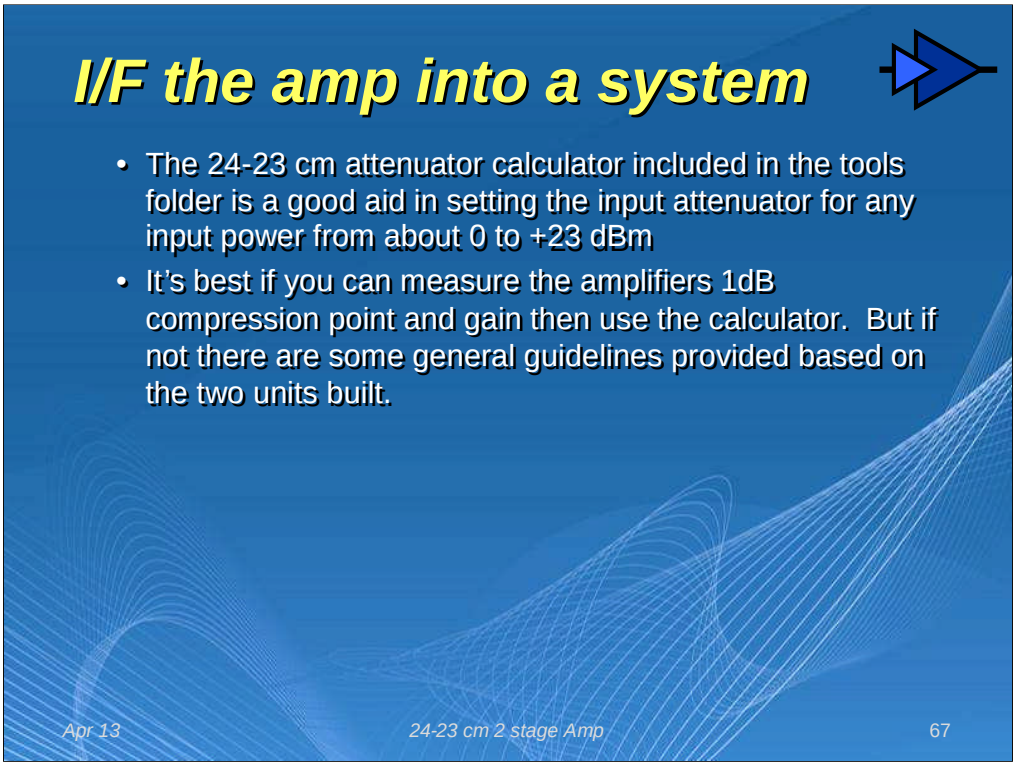

•Here's how to interface the amplifier to an external modulator or transverter without overloading or burning out the amplifier.

Setting the Amp I/P Level

Pin		Input Pi Attenuator Setting					
		I_{DD} 1.5A			I_{DD} 6.3A		
dBm	mW	1240 MHz	1270 MHz	1300 MHz	1240 MHz	1270 MHz	1300 MHz
-5	0.3	---	---	---	---	0.5	---
-4	0.4	---	---	---	---	1.5	---
-3	0.5	---	---	---	---	2.5	---
-2	0.6	---	---	---	---	3.5	---
-1	0.8	---	---	---	---	4.5	---
0	1.0	---	---	---	---	5.5	1.0
1	1.3	---	---	---	1.0	6.5	2.0
2	1.6	---	---	---	2.0	7.5	3.0
3	2.0	---	---	---	3.0	8.5	4.0
4	2.5	---	---	---	4.0	9.5	5.0
5	3.2	---	1.0	---	5.0	10.5	6.0
6	4	---	2.0	0.5	6.0	11.5	7.0
7	5	1.0	3.0	1.5	7.0	12.5	8.0
8	6	2.0	4.0	2.5	8.0	13.5	9.0
9	8	3.0	5.0	3.5			
10	10	4.0	6.0	4.5			
11	13	5.0	7.0	5.5			
12	16	6.0	8.0	6.5			
13	20	7.0	9.0	7.5			
14	25	8.0	10.0	8.5			
15	32	9.0	11.0	9.5			
16	40	10.0	12.0	10.5			
17	50	11.0	13.0	11.5			
18	63	12.0	14.0	12.5			
19	79	13.0	15.0	13.5			
20	100	-0.2	1.8	0.3	*Bypass the 1st stage amplifier*		
21	126	0.8	2.8	1.3	*Bypass the 1st stage amplifier*		
22	158	1.8	3.8	2.3	*Bypass the 1st stage amplifier*		
23	200	2.8	4.8	3.3	*Bypass the 1st stage amplifier*		

- Attenuator spreadsheet shows input levels needed to obtain an output at the 1dB gain compression point.

Here's how to interface the amplifier to an external modulator or transverter without overloading or burning out the amplifier.

Physical Assy I/O Connections

The I/O Uses

- SMA RF connectors in & N to antenna
- PowerPole for Power
- Mini-Din for control
- LED's for Pwr, Tx, & Over temperature
- Antenna Tx / Rx relay mounts into the enclosure

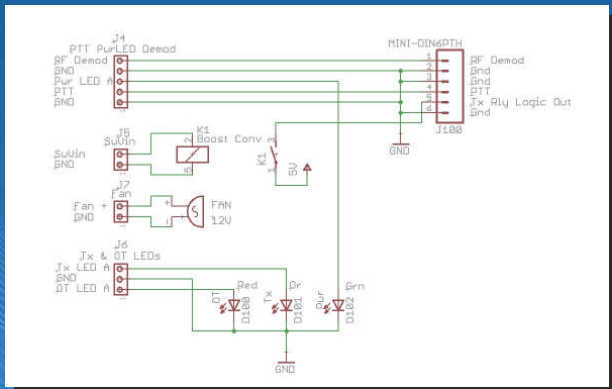

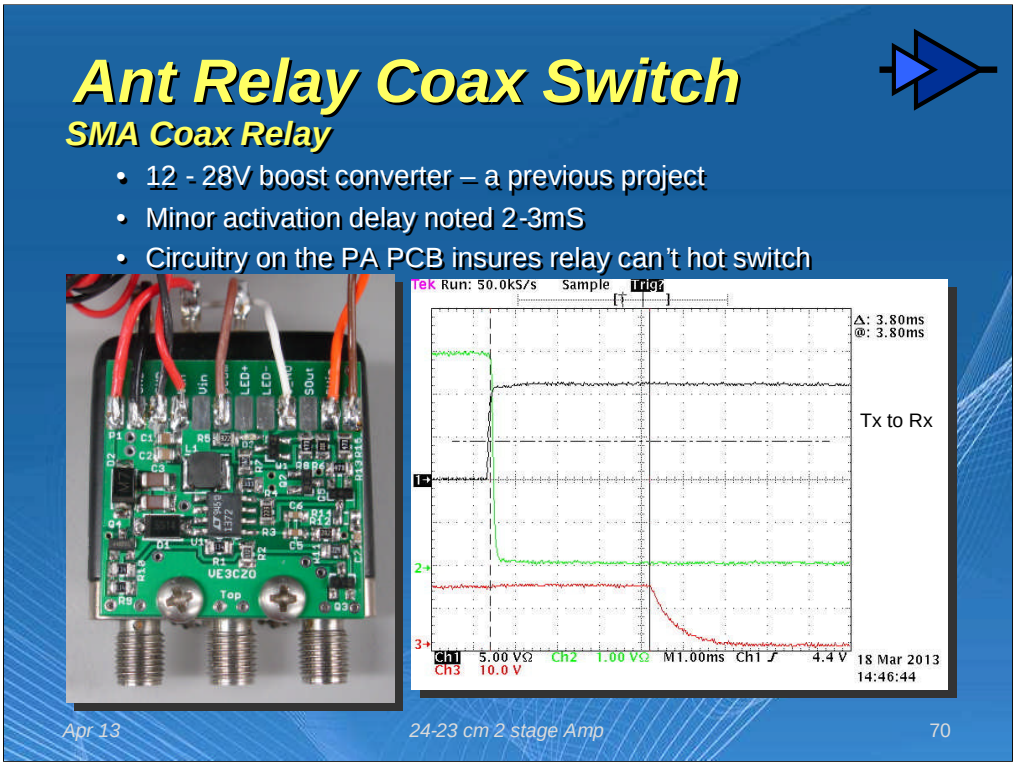

•the transmitter should never output RF before the relay settles into the Tx state, and the relay should only switch after the amplifier RF ceases.

•For without a controller the circuit adds delays so that the relay never hot switches.

•Timing diagram shows Ch1 the PTT, C2 VBIAS on the RA18H1213G module, and Ch3 the relay contact.

Ant Relay Coax Switch

Rx to Tx Transition

- Blk – PTT Grn - Vgg 5v Red – Relay contact
- Left display shows total rise time 115ms, 25ms /division
- Right display shows relay switches when Vgg<1V

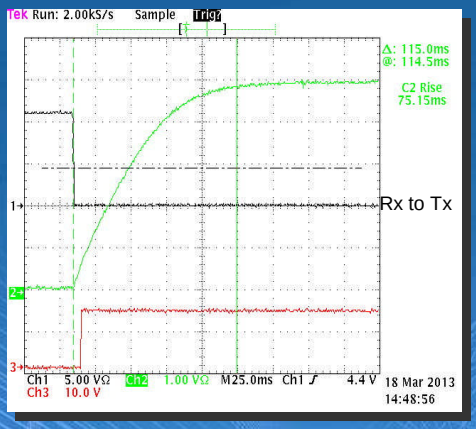

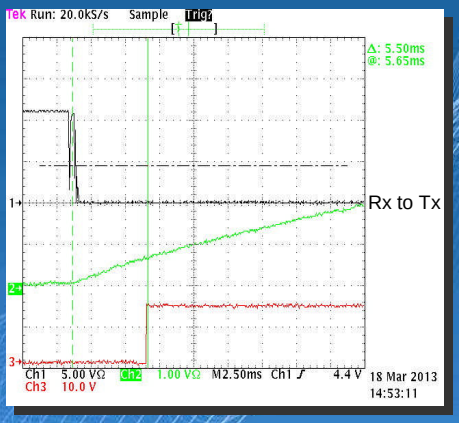

•The relay must switch to Tx before Vgg reaches about 2.5 volts. You'll see why in the next slide.

•The rise time is about 115ms. This can be reduced by decreasing C20 but keep the switch point to a VBIAS that's under 2.5V…here's why…

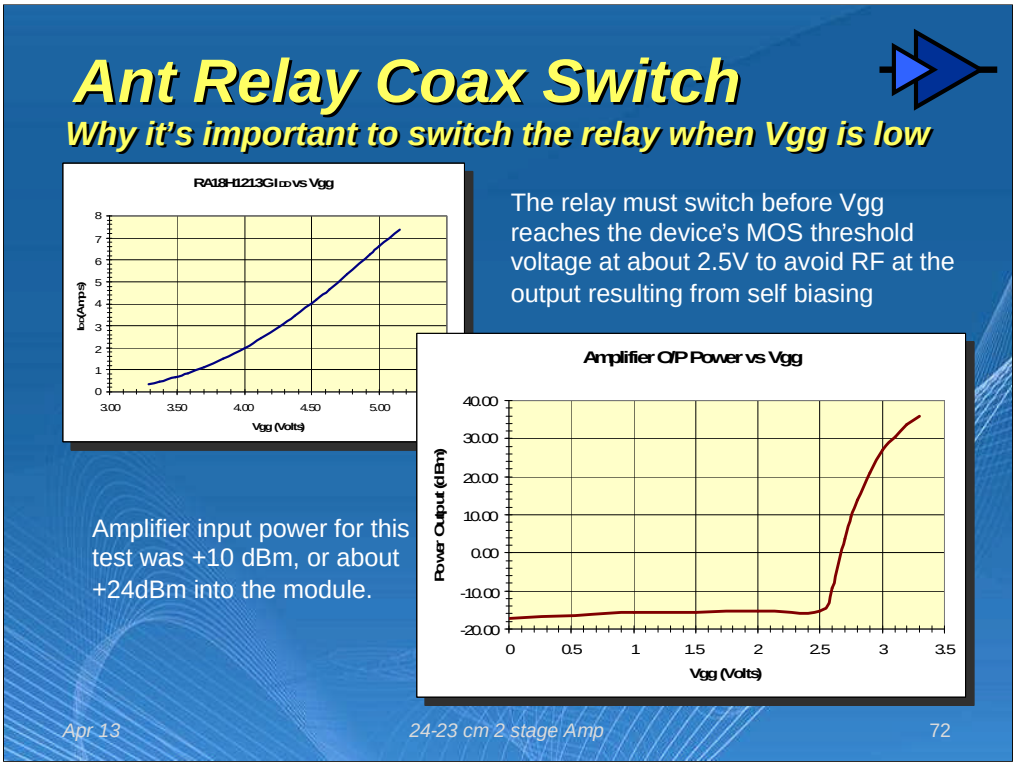

•If Vgg is close to or slightly above threshold large RF input voltages will self bias the amplifier producing large RF output powers.

•Remember the earlier graphs that showed increasing gain at low bias currents as the input power was increased? Self biasing is the likely cause.

Demod coupling Adjusted

- Envelope demodulator's coupling factor is adjusted by raising or lowering the wire loop above the PCB output transmission line track

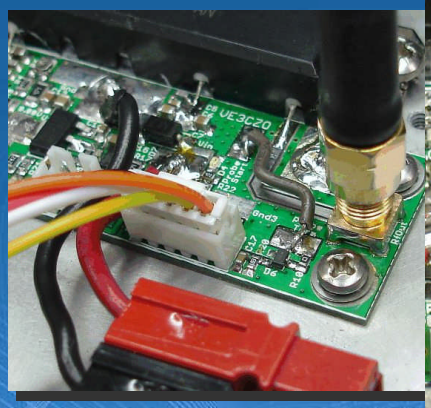

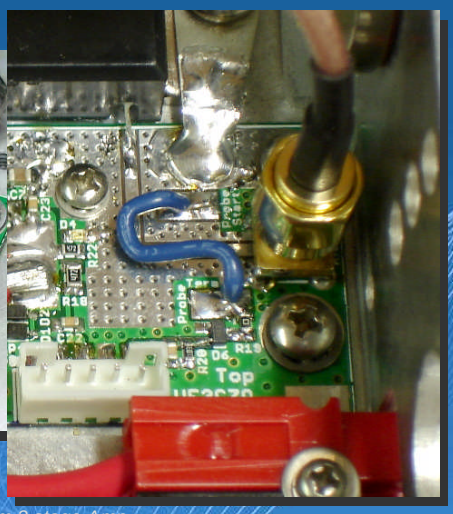

•The coupling loop on the left is from version 0.0e and the one on the right from V0.0g.

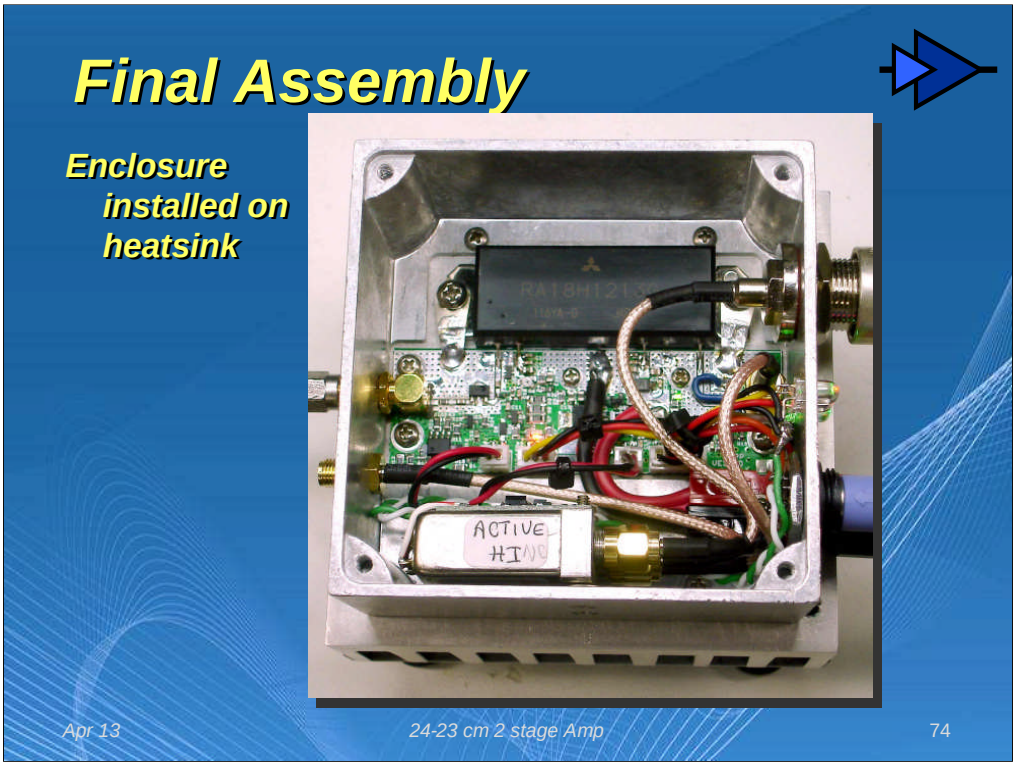

•I/O RF cables can be ordered from a number of inexpensive overseas locations. One I like can be found in the Parts List document.

•The coax relay is bolted to the side of the enclosure with standoffs so that the contacts don't touch the enclosure.

•Path loss through the unit, pigtails & relay is between 0.8 and 0.9 dB.

•The connection to the fan is via a hole drilled through the heatsink big enough to allow the two pin connector to pass through.

Final Assembly

- The feet on the fan can be removed after final testing. Until then they allow air into the heatsink as the unit is inverted for test.

Bits & Pieces mentioned

- Wcalc transmission line calculator
  http://wcalc.sourceforge.net/index.html
- LLSmith for impedance matching
  http://www.rfdude.com
- Zplots for displaying SP2 files and a lot more…
  http://ac6la.com/zplots.html
- Cadsoft Eagle for Schematic capture and PCB layout
  http://www.cadsoftusa.com/